PROPOSED $200,000 FRESNO THEATER

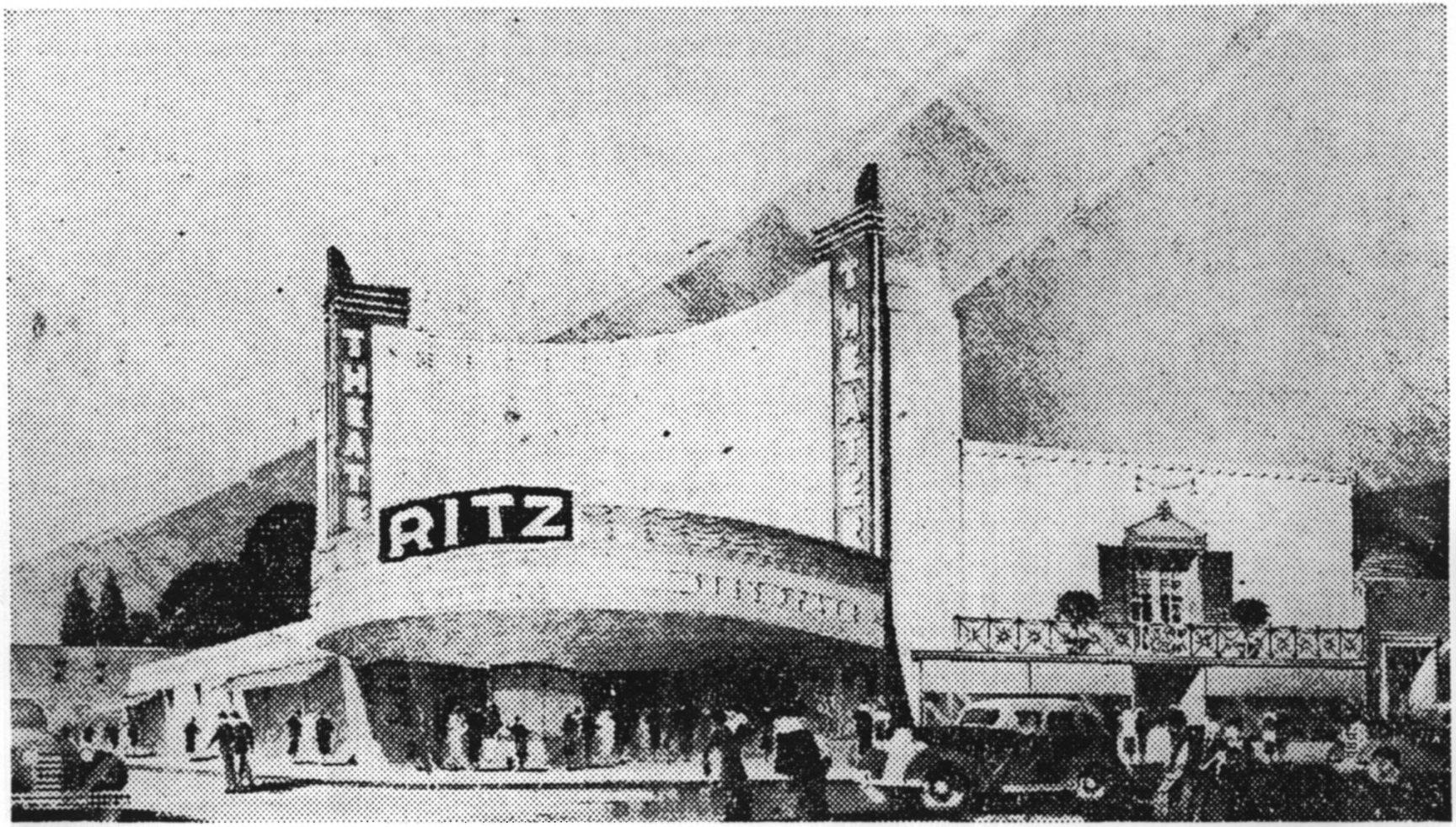

The Ritz, a $200,000 neighborhood theater which the Fox West Coast Theater Corporation will build at Olive and Wishon Avenues, will almost duplicate in architectural design a recently completed Fox Theater, shown in this architect's sketch, at Westwood, Los Angeles County. Retail stores will occupy the greater part of the ground floor frontage.

1. TOWER THEATRE
1201 NORTH WISHON AVENUE

2. FRESNO, CA 93728

3. S. CHARLES LEE
ARCHITECT (RENDERING)

4. DECEMBER 3, 1938

5. FRESNO BEE
VOLUME 33, No. 5794
DECEMBER 3, 1938
PAGE 1-B

6. CORNER VIEW OF
EARLY PROPOSED
DESIGN FOR FRESNO
TOWER THEATRE (ORIGINALLY
DESIGNATED "THE
RITZ"), ARTIST LOOKING
NORTHWEST.

7. 1 OF 21

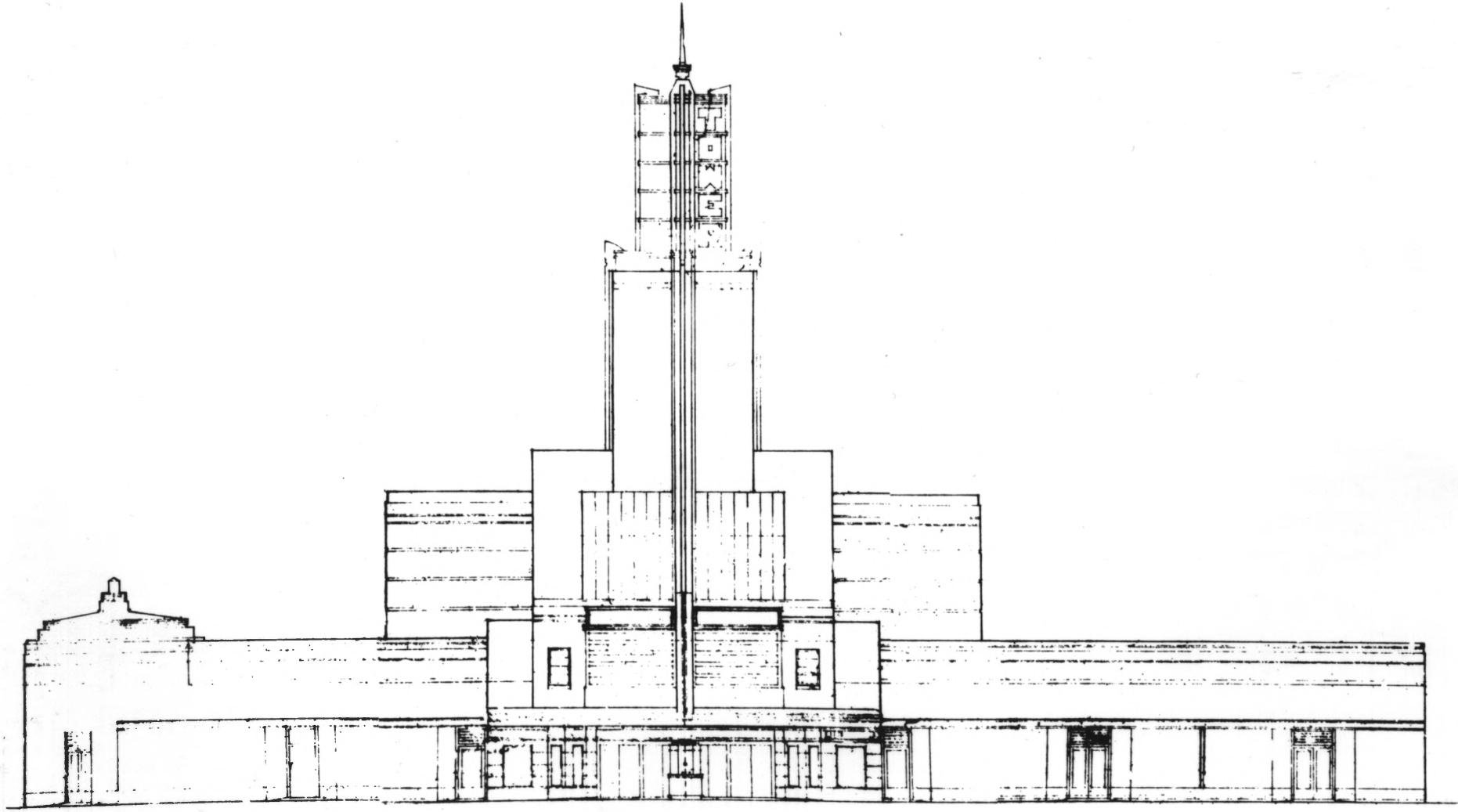

1. TOWER THEATRE
1201 NORTH WISHON AVENUE

2. FRESNO, CA 93728

3. THOMAS F. CHASE
CONSTRUCTION ENGINEER
(DRAWING)

4. MARCH 29, 1939

5. MICROFICHE RECORDS
DEVELOPMENT DEPARTMENT
CITY HALL
FRESNO, CA 93721

6. EAST ELEVATION OF
ALTERNATE PROPOSED
DESIGN FOR FRESNO
TOWER THEATRE, VIEW
LOOKING WEST.

7. 2 OF 21

S. CHARLES. LEE.
·ARCHITECT·
RITZ THEATRE
THREE ROWS OF LETTERS
SPACE FOR LETTERS
SPACE FOR SIGNS
DRUGS
SHOPPE
JEWELER
FILMS
SIGN SPACE

1. TOWER THEATRE
1201 NORTH WISHON AVENUE

2. FRESNO, CA 93728

3. S. CHARLES LEE
ARCHITECT (RENDERING)

4. 1939

5. S. CHARLES LEE COLLECTION
DEPARTMENT OF SPECIAL COLLECTIONS
UNIVERSITY RESEARCH LIBRARY
UNIVERSITY OF CALIFORNIA
LOS ANGELES, CA 90024

6. CORNER VIEW OF FRONT ELEVATIONS LOOKING NORTHWEST. NOTE EARLY LOW-PROFILE TOWER DESIGN AND PRELIMINARY NAME "THE RITZ," LATER CHANGED TO "THE TOWER."

7. 3 OF 21

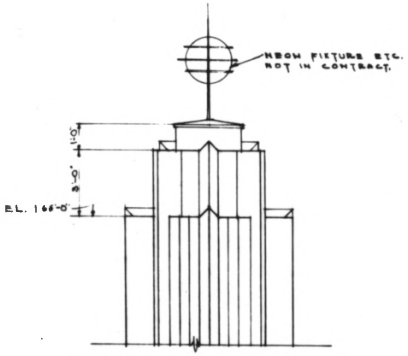

TOP TOWER ELEVATION

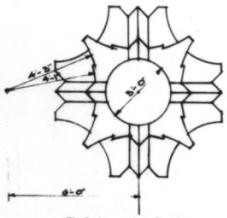

TOP VIEW

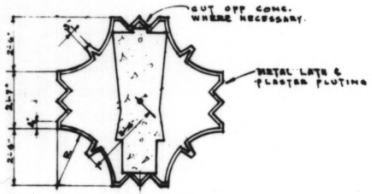

SECTION

AT TOP OF EXISTING CONCRETE TOWER.
DIA. OF TOWER TO BE 12" LESS AT TOP.
SCALE 3/4"=1'-0"

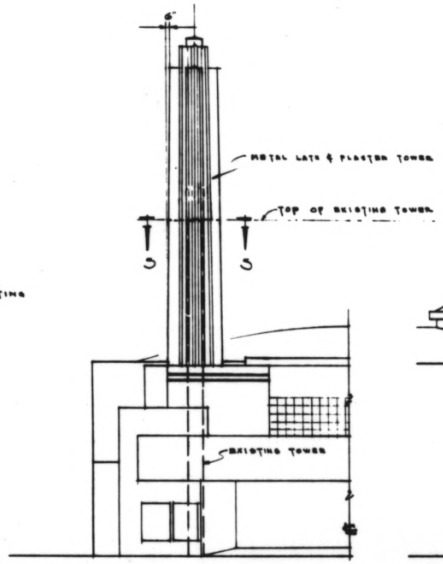

FRONT ELEVATION

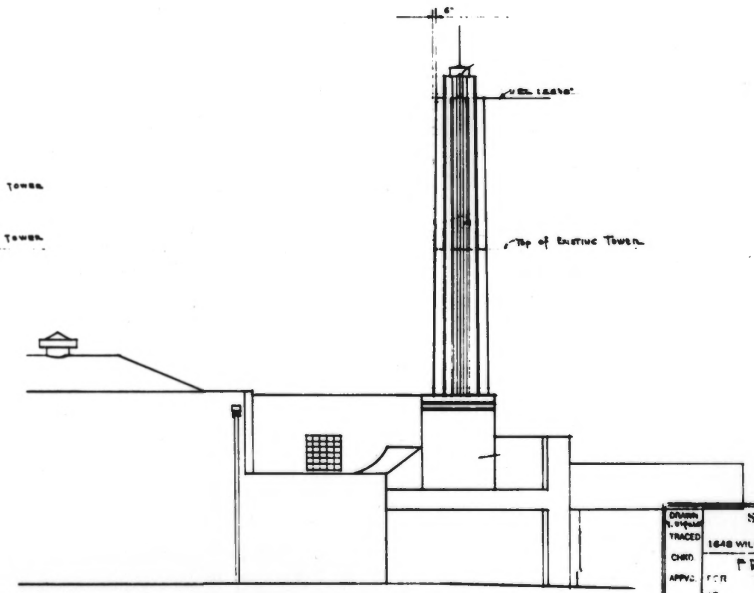

SIDE ELEVATION

DRAWN TRACED CHKD APPVD	S. CHARLES LEE ARCHITECT 1648 WILSHIRE BLVD., LOS ANGELES, CAL. FOR TOWER DETAILS AT FRESNO, CAL.	OPUS 507 DATE AUGUST 4 1939 SHEET 7B
	CONTRACTOR SHALL VERIFY ALL CONDITIONS AND DIMENSIONS AND REPORT ANY DISCREPANCIES BEFORE SIGNING CONTRACT	

1. TOWER THEATRE
1201 NORTH WISHON AVENUE

2. FRESNO, CA 93728

3. S. CHARLES LEE
ARCHITECT (DRAWING)

4. AUGUST 4, 1939

5. S. CHARLES LEE COLLECTION
DEPARTMENT OF SPECIAL COLLECTIONS
UNIVERSITY RESEARCH LIBRARY
UNIVERSITY OF CALIFORNIA
LOS ANGELES, CA 90024

6. MODIFIED (CHANGE ORDER)
TOWER DESIGN PATTERNED
AFTER PROTOTYPE NEON TOWER
AT THE 1939 NEW YORK
WORLDS FAIR.

7. 4 OF 21

Tower
NOW - "YOU CAN'T TAKE IT WITH YOU"
10 BIG DOOR PRIZES - WEDNESDAY MATINEE
LAST FREE PACKARD DRAWING THURSDAY
Tower
NOW. ACADEMY AWARD WINNER
"YOU CANT TAKE IT WITH YOU"
- THE GREAT WALTZ

1. TOWER THEATRE
1201 NORTH WISHON AVENUE

2. FRESNO, CA 93728

3. CLAUDE "POP" LAVAL

4. c. 1940

5. S. CHARLES LEE COLLECTION
DEPARTMENT OF SPECIAL COLLECTIONS
UNIVERSITY RESEARCH LIBRARY
UNIVERSITY OF CALIFORNIA
LOS ANGELES, CA 90024

6. SOUTHEAST CORNER ELEVATION,
CAMERA FACING NORTHWEST

7. 5 OF 21

ENTRANCE
ONLY

1. TOWER THEATRE
1201 NORTH WISHON AVENUE
2. FRESNO, CA 93728
3. CLAUDE "POP" LAVAL
4. c. 1945
5. G. CHARLES LEE COLLECTION
DEPARTMENT OF SPECIAL COLLECTIONS
UNIVERSITY RESEARCH LIBRARY
UNIVERSITY OF CALIFORNIA
LOS ANGELES, CA 90024
6. VIEW OF SOUTH AND WEST
ELEVATIONS, CAMERA FACING
NORTHEAST
7. 6 OF 21

Through Popular
DEMAND!
Starting
June-20th The Tower Theatre
Run An Additional Matinee On
WEDNESDAYS
More Entertainment Hours For Your
Pleasure
You Can Attend A Matinee On Saturday Or
WEDNESDAY!
Tower Sound Premiere
Do We Go
From Here?
TRACY HEPBURN

1. TOWER THEATRE
1201 NORTH WISHON AVENUE

2. FRESNO, CA 93728

3. CLAUDE "POP" LAVAL

4. C. 1945

5. S. CHARLES LEE COLLECTION
DEPARTMENT OF SPECIAL COLLECTIONS
UNIVERSITY RESEARCH LIBRARY
UNIVERSITY OF CALIFORNIA
LOS ANGELES, CA 90024

6. VIEW OF MAIN ENTRY DOORS
TO THEATRE, CAMERA
FACING NORTHWEST

7. 7 OF 21

1. TOWER THEATRE
1201 NORTH WISHON AVENUE

2. FRESNO, CA 93728

3. CLAUDE "POP" LAVAL

4. c. 1940

5. S. CHARLES LEE COLLECTION
DEPARTMENT OF SPECIAL COLLECTIONS
UNIVERSITY RESEARCH LIBRARY
UNIVERSITY OF CALIFORNIA
LOS ANGELES, CA 90024

6. VIEW OF BAS-RELIEF ETCHED
GLASS PANEL IN FOYER
EXECUTED AFTER A DESIGN
BY N.Y. SCULPTOR GAETANO
CECERE, CAMERA FACING NORTHWEST.

7. 8 OF 21

EXIT

1. TOWER THEATRE
1201 NORTH WISHON AVENUE

2. FRESNO, CA 93728

3. CLAUDE "POP" LAVAL

4. c. 1940

5. S. CHARLES LEE COLLECTION
DEPARTMENT OF SPECIAL COLLECTIONS
UNIVERSITY RESEARCH LIBRARY
UNIVERSITY OF CALIFORNIA
LOS ANGELES, CA 90024

6. VIEW OF THEATRE FOYER,
CAMERA FACING SOUTHWEST.

7. 9 OF 21

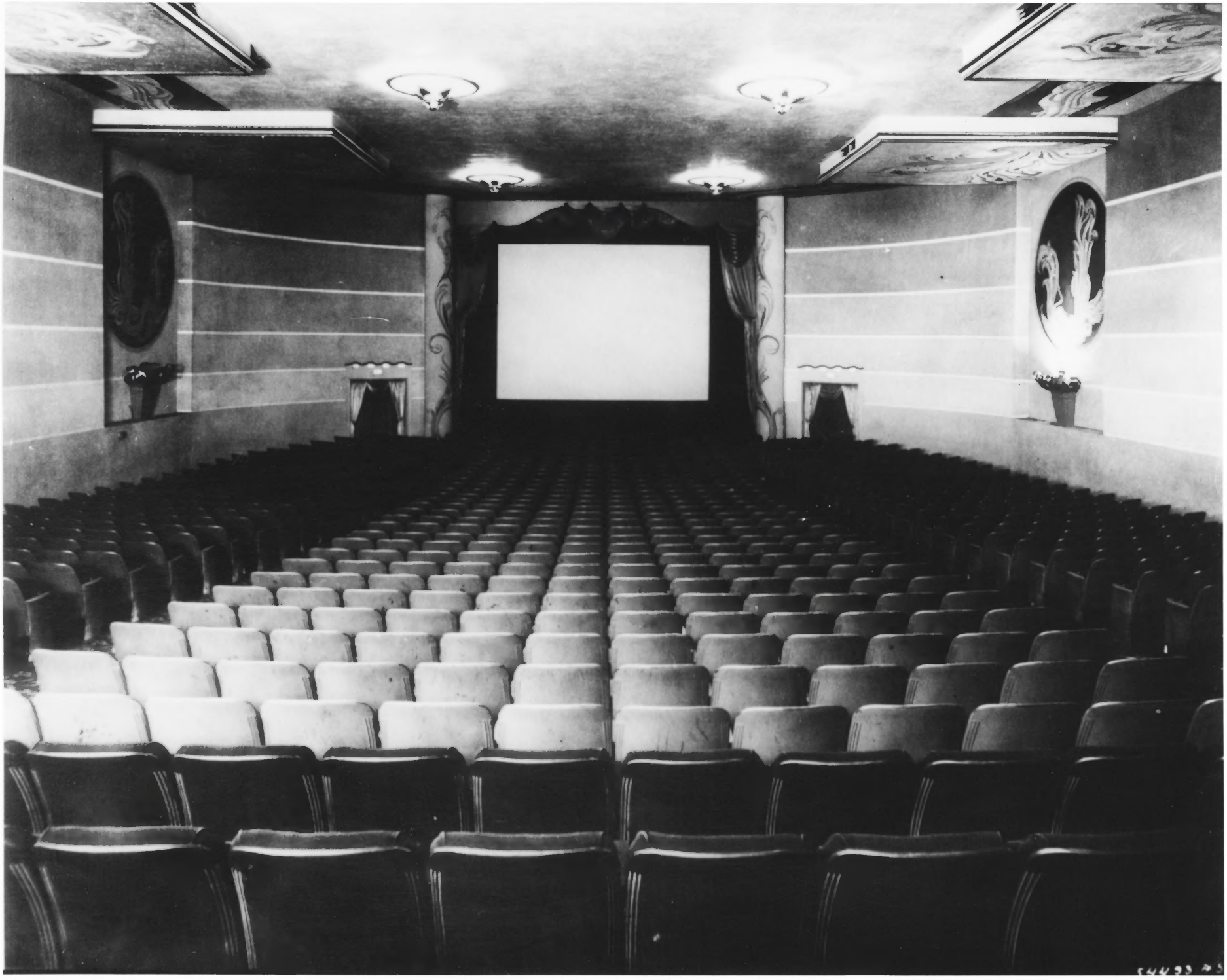

1. TOWER THEATRE
1201 NORTH WISHON AVENUE

2. FRESNO, CA 93728

3. CLAUDE "POP" LAVAL

4. c. 1940

5. S. CHARLES LEE COLLECTION
DEPARTMENT OF SPECIAL COLLECTIONS
UNIVERSITY RESEARCH LIBRARY
UNIVERSITY OF CALIFORNIA
LOS ANGELES, CA 90024

6. VIEW OF THEATRE AUDITORIUM
TOWARD SCREEN, CAMERA
FACING NORTHWEST.

7. 10 OF 21

Tower
Tower
Tower
THE DIAMONDS NOV 8
CA HEARTLAND CHORUS NOV 2
KENNY RANKIN NOV 22
N WISHON AVE
1200
THE LIMELITERS NOV 15
GEORGE CARLIN DEC 6
CALL 485 9050 FOR TICKETS
WARREN MILLER SKI MOVIE NOV 9
YOUTH PHILHARMONIC DEC 8
STORIES FOR CHRISTMAS DEC 14
ONE WAY

1. TOWER THEATRE
1201 NORTH WASHINGTON AVENUE

2. FRESNO, CA 93728

3. KEITH SEAMAN

4. NOVEMBER 24, 1991

5. CAMERAD
1829 VAN NESS AVENUE
FRESNO, CA 93721

6. DETAILED VIEW OF
MARQUEE AND
TOWER, CAMERA
FACING NORTHWEST.

7. 11 OF 21

Tower
Tower
THE LIMELITERS NOV 15
GEORGE CARLIN DEC 6
CALL 485 9050 FOR TICKETS
WARREN MILLER SKI MOVIE NOV 9
YOUTH PHILHARMONIC DEC 8
STORIES FOR CHRISTMAS DEC 14
WASHINGTON
Cleaners

1. TOWER THEATRE
1201 NORTH WISHON AVENUE

2. FRESNO, CA 93728

3. KEITH SEAMAN

4. NOVEMBER 24, 1991

5. CAMERAD
1829 VAN NESS AVENUE
FRESNO, CA 93721

6. VIEW OF STREET
ELEVATIONS, CAMERA
FACING NORTHWEST.

7. 12 OF 21

Tower
WARREN MILLER SKI MOVIE NOV 9
YOUTH PHILHARMONIC DEC 8
STORIES FOR CHRISTMAS DEC 14

1. TOWER THEATRE
1201 NORTH WISHON AVENUE

2. FRESNO, CA 93728

3. KEITH SEAMAN

4. NOVEMBER 24, 1991

5. CAMERAD
1829 VAN NESS AVENUE
FRESNO, CA 93721

6. VIEW OF EAST ELEVATION,
CAMERA FACING WEST.

7. 13 OF 21

JAVA CAFE
MONDO BOOKS
Flower
E DIAMONDS NOV 8
HEARTLAND CHORUS NOV 2
ENNY RANKIN NOV 22
ROGER ROCKA'S
MUSIC HALL

1. TOWER THEATRE
   1201 NORTH WISHON AVENUE
2. FRESNO, CA 93728
3. KEITH SEAMAN
4. NOVEMBER 24, 1991
5. CAMERAD
   1829 VAN NESS AVENUE
   FRESNO, CA 93721
6. VIEW OF SOUTH ELEVATION
   CAMERA FACING NORTH

7. 14 OF 21

GOOD JOB
A GREAT START
MS: 455-5454

1. TOWER THEATRE
1201 NORTH WISHON AVENUE

2. FRESNO, CA 93728

3. KEITH SEAMAN

4. NOVEMBER 24, 1991

5. CAMERAD
1829 VAN NESS AVENUE
FRESNO, CA 93721

6. VIEW OF REAR
ELEVATION(S), CAMERA
FACING SOUTHEAST.

7. 15 OF 21

EXIT

1. TOWER THEATRE
1201 NORTH WISHON AVENUE
2. FRESNO, CA 93728
3. RUSSELL ABRAHAM
4. MARCH 11, 1990
5. RUSSELL ABRAHAM
17 BROSNAN STREET
SAN FRANCISCO, CA 94103
6. VIEW OF THEATRE FOYER SHORTLY AFTER COMPLETION OF CERTIFIED HISTORIC REHABILITATION, CAMERA FACING SOUTHWEST.
7. 16 OF 21

1. TOWER THEATRE
1201 NORTH WISHON AVENUE

2. FRESNO, CA 93728

3. RUSSELL ABRAHAM

4. MARCH 11, 1990

5. RUSSELL ABRAHAM
17 BROSNAN STREET
SAN FRANCISCO, CA 94103

6. VIEW OF BAS-RELIEF ETCHED GLASS PANEL IN FOYER (EXECUTED AFTER A DESIGN BY N.Y. SCULPTOR GAETANO CECERE), SHORTLY AFTER COMPLETION OF CERTIFIED HISTORIC REHABILITATION, CAMERA FACING NORTHWEST.

7. 17 OF 21

1. TOWER THEATRE:
1201 NORTH WISHON AVENUE

2. FRESNO, CA 93728

3. RUSSELL ABRAHAM

4. MARCH 11, 1990

5. RUSSELL ABRAHAM
17 BROSNAN STREET
SAN FRANCISCO, CA 94103

6. VIEW OF THEATRE AUDITORIUM SHORTLY AFTER COMPLETION OF CERTIFIED HISTORIC REHABILITATION WITH NEW EXPANDED PERFORMANCE PLATFORM, CAMERA FACING NORTHWEST.

7. 18 OF 21

Me·N·Ed's
PIZZA PARLOR

1. TOWER THEATRE (SITE)
1201 NORTH WISHON AVENUE

2. FRESNO, CA 93728

3. JOHN EDWARD POWELL

4. MARCH 9, 1992

5. JOHN EDWARD POWELL
224 EAST CAMBRIDGE AVE
FRESNO, CA 93704

6. VIEW OF ME & ED'S PIZZA PARLOR BUILDING ON PARCEL NO. 2 CONTIGUOUS TO TOWER THEATRE SITE, CAMERA FACING WEST.

7. 19 OF 21

Dollar
Cleaners
BUS STOP

1. TOWER THEATRE (SITE)
1201 NORTH WISHON AVENUE

2. FRESNO, CA 93728

3. JOHN EDWARD POWELL

4. MARCH 9, 1992

5. JOHN EDWARD POWELL
224 EAST CAMBRIDGE AVE.
FRESNO, CA 93704

6. VIEW OF NON-CONTRIBUTING FEATURE (DETACHED COMMERCIAL BUILDING C. 1967, REMODELED IN MARCH, 1989, FOR MICRO BREWERY TENANT) ON TOWER THEATRE SITE, CAMERA FACING NORTH.

7. 20 OF 21

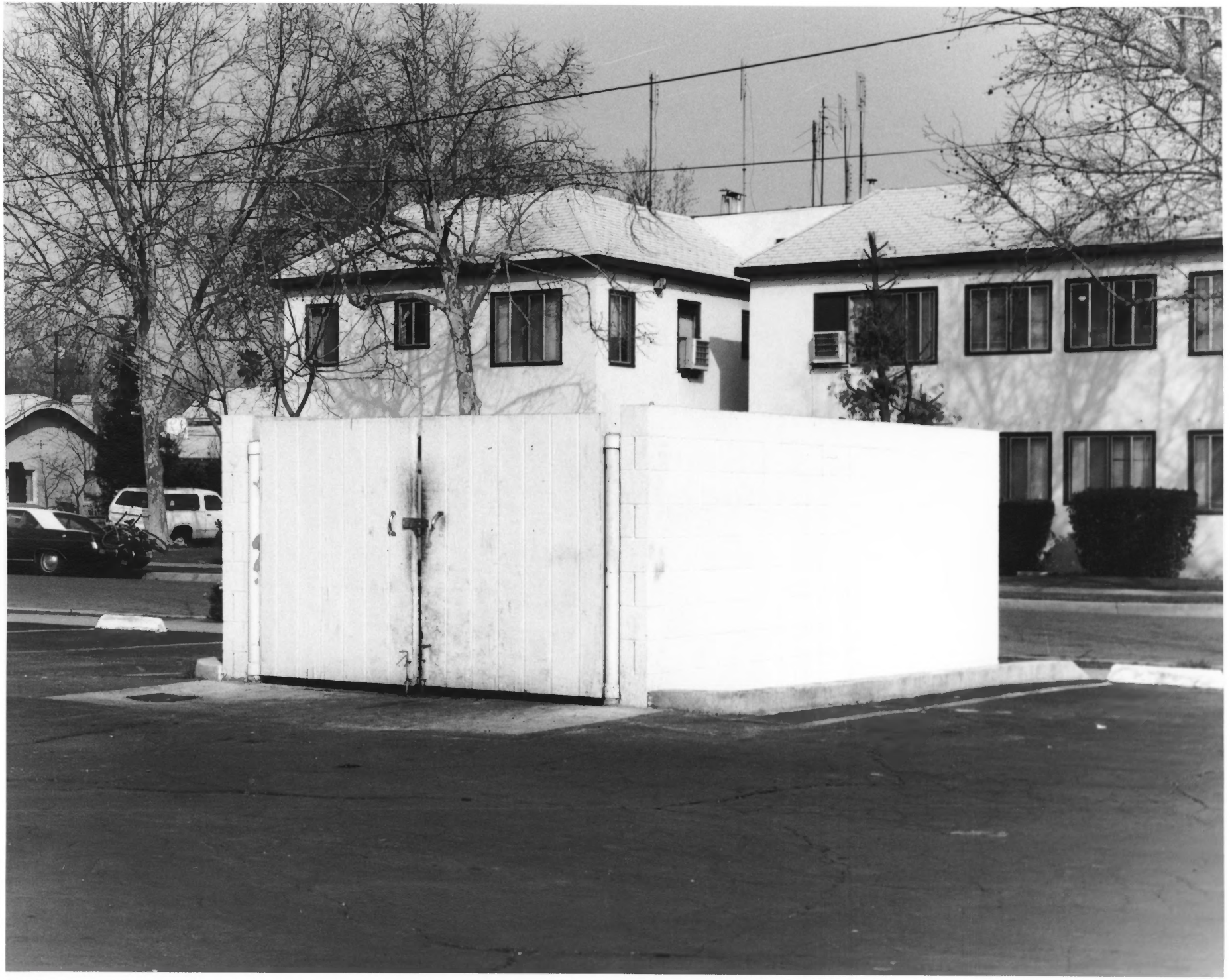

1. TOWER THEATRE (SITE)
1201 NORTH WISHON AVENUE

2. FRESNO, CA 93728

3. JOHN EDWARD POWELL

4. MARCH 9, 1992

5. JOHN EDWARD POWELL
224 EAST CAMBRIDGE AVE
FRESNO, CA 93704

6. VIEW OF PAINTED CONCRETE BLOCK TRASH ENCLOSURE (C. 1988-89) LOCATED ON TOWER THEATRE SITE, CAMERA FACING NORTHWEST.

7. 21 OF 21