NPS Form 10-900 OMB No. 1024-0018

United States Department of the Interior
National Park Service

SC627

National Register of Historic Places Registration Form

RECEIVED
DEC 23 2016
Natl. Reg. of Historic Places
National Park Service

This form is for use in nominating or requesting determinations for individual properties and districts. See instructions in National Register Bulletin, *How to Complete the National Register of Historic Places Registration Form*. If any item does not apply to the property being documented, enter "N/A" for "not applicable." For functions, architectural classification, materials, and areas of significance, enter only categories and subcategories from the instructions.

1. Name of Property

Historic name: Mitchell Camera Corporation Factory/Studio One
Other names/site number: Studio One (preferred), The Factory
Name of related multiple property listing:
n/a
(Enter "N/A" if property is not part of a multiple property listing)

2. Location

Street & number: 661-665 N Robertson Boulevard & 652 N. La Peer Drive
City or town: West Hollywood State: CA County: Los Angeles
Not For Publication: ☐ Vicinity: ☐

3. State/Federal Agency Certification

As the designated authority under the National Historic Preservation Act, as amended,

I hereby certify that this ___ nomination x request for determination of eligibility meets the documentation standards for registering properties in the National Register of Historic Places and meets the procedural and professional requirements set forth in 36 CFR Part 60.

In my opinion, the property x meets ___ does not meet the National Register Criteria. I recommend that this property be considered significant at the following level(s) of significance:

___**national** ___**statewide** x **local**

Applicable National Register Criteria:

x **A** ___**B** ___**C** ___**D**

State Historic Preservation Officer 21 December 2016

Signature of certifying official/Title: **Date**

California Office of Historic Preservation

State or Federal agency/bureau or Tribal Government

In my opinion, the property ___ meets ___ does not meet the National Register criteria.

Signature of commenting official: **Date**

Title : **State or Federal agency/bureau or Tribal Government**

4. National Park Service Certification

I hereby certify that this property is:

___ entered in the National Register

X determined eligible for the National Register

___ determined not eligible for the National Register

___ removed from the National Register

___ other (explain:) _____

Signature of the Keeper

2/7/2017
Date of Action

5. Classification

Ownership of Property

(Check as many boxes as apply.)

Private:	X
Public – Local	
Public – State	
Public – Federal	

Category of Property

(Check only **one** box.)

Building(s)	X
District	
Site	
Structure	
Object	

Number of Resources within Property
(Do not include previously listed resources in the count)

Contributing	Noncontributing	
1	1	buildings
		sites
		structures
		objects
1	1	Total

Number of contributing resources previously listed in the National Register _____

6. Function or Use
Historic Functions
(Enter categories from instructions.)
INDUSTRY/manufacturing facility
COMMERCE/professional
COMMERCE/business
RECREATION AND CULTURE/music facility
RECREATION AND CULTURE/theater
COMMERCE/restaurant
INDUSTRY/industrial storage

Current Functions
(Enter categories from instructions.)
RECREATION AND CULTURE/music facility
RECREATION AND CULTURE/theater
RECREATION AND CULTURE/sports facility
COMMERCE/business
COMMERCE/restaurant

7. Description

Architectural Classification
(Enter categories from instructions.)
_No Style_____
_ Modern Movement:Other: Zig-Zag Moderne

Materials: (enter categories from instructions.)
Principal exterior materials of the property:

_foundation: Reinforced Concrete Block
_walls: Copper Steel Panels
_roof: Asphalt, Copper Steel
_other: Metal Framed Industrial Windows
_foundation: Reinforced Concrete Block
_walls: Stucco_____
_roof: Asphalt_____
_Other: Metal Framed Industrial Windows

Narrative Description
(Describe the historic and current physical appearance and condition of the property. Describe contributing and noncontributing resources if applicable. Begin with **a summary paragraph** that briefly describes the general characteristics of the property, such as its location, type, style, method of construction, setting, size, and significant features. Indicate whether the property has historic integrity.)

Summary Paragraph

The Mitchell Camera Corporation Factory/Studio One Disco-Backlot Theatre building, known as The Factory, is one of the earliest reinforced concrete and steel buildings in West Hollywood. When completed in 1929, The Factory was celebrated as the "largest factory in the world manufacturing exclusively standard professional motion picture cameras" with approximately 26,000 square feet of factory floor space. The Factory building is the only known surviving example of a Truscon Steel Company building in West Hollywood and Southern California. The two-story (with basement) industrial building is a daylight factory designed and built by notable daylight factory, design-build company Truscon Steel Company using all Truscon materials and products.[1]

The Factory building is located on Assessor's Parcel Number 4336-009-007 in the City of West Hollywood. The lot is L-shaped. The former factory building and a noncontributing small, stucco

[1] American Cinematographer, "The Mitchell's New Home," 34.

building are sited on the north side of a single parcel fronting Robertson Avenue south of Santa Monica Boulevard. La Peer Drive runs along the west (rear) of the parcel. The former factory building has two street addresses, 661-665 North Robertson and 648 North La Peer Drive.[2] The two buildings occupy approximately 75% of the entire of the parcel; the rest of the parcel is parking lot. The Factory building's form is irregular with steel-copper panels and factory windows on all four elevations, a flat roof, and a factory-windowed monitor. The single-story (and basement) stucco building is a rectangular-shaped with a square, stucco rear addition built in 1940.

Narrative Description

The Factory building has a minimally pitched roof with a one-story, very low gabled monitor running the full length of the building, east to west. The eaves are slightly projecting. There are numerous air conditioner units on the roof. A metal band is riveted along the cornice line and runs around the entire building. The building, including monitor, is covered by decoratively pressed sidewall panels made of cooper and steel, and industrial steel sash windows.[3]

Exterior: The Factory – East Façade

The east façade (Robertson Boulevard) is somewhat hidden by trees. The east façade contains two banks of industrial sash windows with sidewall panels above and below each bank. It has 10 bays. (See Figure 1 and Figure 2) The industrial sash windows alternate in a pattern of five lights high and three lights wide all fixed, and, five lights high and three lights wide with six panes pivoting. The sidewall panels are each 4' high and 2'8" wide.[4] Each bay is two panels side by side, one window, panels two over two, one window, and, panels two over two. The industrial sash windows and copper steel panels are painted black.

The ground level basement is of reinforced concrete. There is one double metal fire door and a bank of four industrial sash windows of two lights high and three lights across with six panes pivoting. A 1939 Sanborn map shows the location of the fire door as original.

An attached industrial, metal staircase leads from the ground floor to the second floor. According to city permits, the staircase was added in 1971. A double glass door was added circa 2010 on the second floor. There was a single metal door prior. Above the double glass door, there is a steel panel measuring approximately 8' wide and 2'8" high. The original industrial sash windows on the second floor were replaced with industrial fixed windows in 2014-2015, and most recently in 2016. The monitor is covered by sidewall panels approximately 4' in length and 13'4" in height.[5] An unattached concrete block half-wall runs along the sidewalk in front of the building and continues west, back toward the building. A multi-paned wooden door is in the opening of the half-wall at the sidewalk.

[2] County of Los Angeles Assessor Records.
[3] "Truscon Permanent Buildings," accessed January 26, 2015, https://archive.org/details/TrusconPermanentBuildingsStandardizedForGeneralIndustries, 29-33.
[4] Ibid, 29.
[5] Ibid.

Exterior: The Factory – South Façade

The lot's grade rises going east to west. The ground level basement is approximately 9' to 10' high at the east end and approximately 2' high at the west end. Three openings in the first floor and one in the second floor are entrances into the building.

The south façade contains two banks of industrial sash windows with sidewall panels above and below each bank. It is 60 bays long. The industrial sash windows alternate in a pattern of five lights high and three lights wide all fixed, and, five lights high and three lights wide with six panes pivoting. The sidewall panels are each 4' high and 2'8" wide. Each bay is two panels side by side, one window, panels two over two, one window, and, panels two over two.

The first floor has a bank of industrial sash windows alternating between five lights high and three across with six panes pivoting, and, five lights high and three across fixed. The sidewall panels are approximately 4' wide and 2'8" high. There are three steel panels approximately 4' wide and 7' high at the west end in the first floor. There is a single wood door, a single metal door, a large, sectional steel door with a metal awning, and a single commercial glass door that is the entrance to the commercial business that occupies most of the first floor interior. Some of the original industrial sash windows on the second floor were replaced with industrial, single pane, fixed windows in 2014-2015.

The sectional steel door does not appear on the last Sanborn map of the area (1961), however, the machinery operating it from the interior indicates it may be original Truscon engine/machinery.[6]

The second floor has a bank of industrial sash windows that alternate between a pattern of 2 three lights high and three across fixed, and, 3 three lights high and three across with six panes pivoting. The sidewall panels are approximately 4' wide and 5'4" high.

There is an attached industrial metal staircase that leads from the ground to the second floor. A wood, privacy fence encloses underneath the stairs. There is an attached industrial sprinkler system that appears to be original. Four air conditioning units sit on the building roof.

The monitor runs the full length of the building, east to west. The monitor has a bank of industrial steel sash windows that alternate between a pattern of three lights high and five lights wide with six panes pivoting, and three lights high and six lights wide with eight panes pivoting. Approximately ten original, industrial steel sash windows were replaced with industrial, double, fixed pane windows in 2015 and 2016. The industrial sash windows and copper steel panels are painted black.

[6] See CA_Los Angeles County_The Factory_0037.

A single floor, brick structure abuts the south façade at the eastern end. There are two small, wood structures that abut the south façade at the western end and middle.

Exterior: The Factory – West Façade

The west façade (La Peer Drive) contains one bank of industrial sash windows with sidewall panels above and below the bank. It has 10 bays. The industrial sash windows alternate in a pattern of five lights high and three lights wide all fixed, and, five lights high and three lights wide with six panes pivoting. The sidewall panels are approximately 4' high and 2'8" wide. Each bay is panels two over two repeated three times, one window, and, panels two over two. The industrial sash windows and copper steel panels are painted black.

The ground level basement is approximately one foot high and made of reinforced concrete block. Two openings in the first floor are entrances into the building.

A double glass door and one single glass door appear to have been added between 1969 and 1978 according to historical photographs. It is likely the glass doors were added during the Studio One Disco-Backlot Theatre period of significance (1974-1984). A 1969 photograph shows a large, double door opening, which looks very similar to a 1929 interior photograph. (See Figure 4 and Figure 9) The large, single door opening appears to have been fitted with double glass doors and a single glass door was added between 1969 and 1978. A 1978 Studio One disco photograph shows the glass doors. (See Figure 5)

A Truscon Standard Steel Sliding Door appears to be from the Mitchell Camera Corporation period of significance (1929-1946) according to the 1939 Sanborn maps. The door is a single leaf, manually operated, horizontal, sliding door approximately 7' high and 6' with six lights, three over two above sidewall panels.[7]

The first floor contains three industrial sash windows that are three lights high and three lights wide all fixed. One pane has been replaced with a metal vent cover grill. A sidewall panel approximately 2' wide and 8' high is between the windows and the glass doors. A sidewall panel approximately 2' wide and 8' high and a sidewall panel approximately 4' wide and 8' high are between the glass doors and the sliding door.

A metal ladder is attached to the second floor with curved, metal handrails attached to the roof. The monitor is covered by sidewall panels approximately 4' in length and 13'4" in height.

A canopy approximately 10' wide projects over the building's glass doors to the sidewalk. The canopy is made of a metal frame with 4 metal support posts. A freestanding handrail goes from between the double and single glass doors and the sidewalk. The handrail is made of galvanized, metal pipe.

[7] "Truscon Permanent Buildings," accessed January 26, 2015, https://archive.org/details/TrusconPermanentBuildingsStandardizedForGeneralIndustries, 34.

Privacy walls approximately 8' high run from each side of the glass doors diagonally to the sidewalk. A quarter-wall runs along the sidewalk from the privacy wall to the canopy posts. The walls are made of concrete block covered in decorative tile.

Exterior: The Factory – North Façade

The north façade is similar to the south façade with the lot's grade rising from east to west, 60 bays long, two banks of industrial sash windows with the same fenestration pattern, sidewall panels, low front gable roof and monitor. Three openings in the north elevation are entrances with single metal doors. Some second floor and monitor original industrial sash windows were replaced with industrial fixed windows in 2014-2016. At the approximate middle of the north

elevation is a side wing that protrudes from the building. The industrial sash windows and copper steel panels are painted green.

The side wing is similar to the larger rectangular building with two banks of industrial sash windows with a similar fenestration pattern, sidewall panels, low front gable roof and a monitor that runs from east to west. The east façade of the side wing is mostly hidden behind a 1929 stucco structure and a later second floor addition, electrical boxes and utility lines, wooden fencing, and industrial steel stairs. The west façade is partially hidden by partially attached, stucco structures with composite roofs added between 1942 to 1944 according to Sanborn maps and a wood-sided structure with a wood door that seems to have been added after 1961 according to Sanborn maps. The north façade contains an opening to the building on the second floor. It is a recessed double doorway. An attached metal staircase runs ground level to the second floor entrance. The staircase does not appear on the 1961 Sanborn map. A building permit refers to metal stairs being installed in May 1988 and a 1989 Studio One Disco event blueprint shows the stairs so it is likely the stair's addition is with in the Studio One Disco-Backlot Theatre period of occupation.

Mitchell Camera Corporation added numerous outbuildings between 1942-1944 (See Map 3) according to Sanborn maps for woodworking, heat treating, painting, storage and a gatehouse that, except for the ones still standing, have been demolished in the ensuing years. Mitchell Camera Corporation left West Hollywood for a larger factory in Glendale, California in 1946.

Interior: The Factory

The Factory's 1929 interior retains integrity. The first and second floors still expose the hallmarks and physical features of a Truscon-built building: Truscon Center Span Trusses, Open Truss Steel Joists, Truscon Steel Columns, sawed end grain wood block flooring (set in concrete slabs), and Truscon Stock Sash Daylight Partitions.[8]

[8] "O-T Open Truss Steel Joists: A Product of Truscon," accessed February 12, 2015. http://archive.org/details/o-tOpenTrussSteelJoistsAProductOfTruscon.

When Mitchell Camera Corp occupied the building, there were partitions made up of Truscon Stock Sash Daylight Partitions; most of the factory floor was open. (See Figure 6 and Figure 9) Since Mitchell Camera Corp left in 1946, some of the Truscon partitions remained and are still in place on the first floor. The second floor is sectioned off with temporary partitions, much like it was during the Studio One and Backlot Theatre period of significance.

The foremost character defining features is the massing of space. One immediately knows they are in a factory building, mostly due to the size, scale, and interior open plan. Exposed trusses, joists, beams, and columns complete the integrity of the main space.

Alterations: The Factory

The building retains almost all of its original Truscon copper steel sidewall panels. And it retains most of its original Truscon industrial steel sash windows. All of the sidewall wall panels have been painted. Most of the windows have been painted. Some of the original glass panes have been removed and replaced. Some of the first floor's sidewall panels are dented due to cars bumping into them.

The Factory, like all Truscon buildings, is earthquake proof.[9] The building is mostly fire proof, except for the wooden floor that Mitchell Camera Corporation installed for its comfort and its vibration resistance.

There are air conditioning units on The Factory building's roof. Various utility lines are attached to The Factory building.

Features of the building have been altered throughout its lifetime. Most alterations reflect the industrial and manufacture upgrades and everyday maintenance. With the change of use to entertainment, a series of operators made cosmetic changes primarily to the interior. The list below documents the major alterations:

No date:	Steel panels painted, window panes painted
Between 1929-1939:	Possible addition of fire door at east façade
1948/1949, 1949/1950:	Storage buildings, varying from 360 square feet to 650 square feet
1950:	18 x 24 storage building
Between 1961-1978	1 single-glass door added to west façade entrance
1971:	Exterior staircase, east façade
1987/1988:	Studio One metal stairs
1994:	2 twenty-minute fire doors, Ladies and Men's Room
1999:	Tenant improvements to interior
1999:	New company in front entrance
1999:	New detached office, storage room addition
1999:	Tenant improvements to interior

[9] "Truscon Permanent Buildings," accessed January 26, 2015, https://archive.org/details/TrusconPermanentBuildingsStandardizedForGeneralIndustries.

2000:	Interior renovation of restaurant with new exterior canopy
2000/2001:	Welding – "structural steel TS frame canopy" – possibly west façade
2001:	Installation of fire alarm
2003:	Change of occupancy load
2005:	1 80 x 80 structure, possibly 1 30 x 70 structure
2007:	Remove existing roof, install 1 ply 28 lbs torch down class A roof
2008/2009:	Addition of awning to commercial building
Circa 2010:	Double-glass door on second floor, east façade
2014/2015, 2016:	Window replacement in existing frames

Alterations have been for life-safety upgrades, window replacement within existing opening and reversible painted-out panes, upgraded entry doors for entertainment use, and setting change with privacy walls. Interior changes are limited to partition walls, which have been created according to need without damaging the primary open space. Mechanical and lighting rigs and reversible decoration elements contribute to the visual change, but do not impact the historic character of the main volume.

The Factory: Integrity

The Factory retains a high degree of integrity. The building has been in continual use since its completion in 1929. After Mitchell Camera Corporation vacated in 1946, the building was used as a drug and cosmetics warehouse, members-only nightclub, interior design offices and showroom, club and theater, various small shops, experimental theater, western-themed restaurant, hardware store, cabaret nightclub, and gay discotheque. The building continues to be used as a nightclub and restaurant, a gym, and offices. The Factory stands out as being one of the last remaining large, industrial buildings left from the manufacturing days of the 1920s-40s in that area, and even at that time The Factory stood out as being one of the only factories of its kind in West Hollywood.[10]

Location: Building has not changed location since construction.

Design: Building maintains industrial character with some alterations (noted above).

Setting: The setting has become increasingly urban. However, the change in surrounding uses has not altered the building's ability to convey its significance. The property shares a border with the Design District and Historic Boystown. Boystown is generally the area around Santa Monica Boulevard between La Cienega Boulevard (and as east as Crescent Heights Boulevard) and La Peer Drive. West Hollywood was a natural draw for gay and lesbian bars because the city was unincorporated until 1984, so the Sheriff's raids and crackdowns on the bars were not as frequent as in the incorporated cities like Los Angeles and Hollywood. The bars were small, windowless places, mostly without signage. In the 1960s and 1970s, the old nightclubs on the Sunset Strip became famous for their live music, especially folk and rock-and-roll. Free spirits, musicians,

[10] American Cinematographer, "The Mitchell's New Home," 34.

bohemians and LGBT moved into the surrounding neighborhoods. The area was given the nickname "Boy's Town." The west side of Santa Monica Boulevard is still considered the most LGBT part of West Hollywood and is now being referred to as "Historic Boystown." The Factory still hosts gay dance events, and across the street from the property on the east side is the most popular LGBT bar in Los Angeles called The Abbey, which is next to another LGBT bar and a LGBT restaurant.

Materials: Some materials have been altered, but materials from its construction remain. Others have been added (windows).

Workmanship: The building reflects its Truscon features. The building retains a high degree of integrity in terms of design and workmanship. Some things have changed on the building's facades but the defining features of the daylight factory - monitor and large windows for natural light and ventilation, open interior - have all been retained. The building has lost some integrity of materials as some of the original industrial sash windows have been replaced and some of the copper and steel sidewall panels have been altered or bent. Since the building is very large and is clad only in sidewall panels and windows, and the interior Truscon trusses, joists, steel columns, and wood floor have been retained, the building retains a high degree of integrity of materials.

Feeling/Association: The property retains integrity of location, feeling and association as an industrial property located in an area that is a mixture of commercial and industrial uses. The southwest side of West Hollywood has held the concentration of the city's industry and manufacturing since the late 1890's when a massive rail yard was constructed on south side of Santa Monica Blvd at San Vicente Blvd (where the Pacific Design Center is).[11] In the late 1940's, furniture makers and interior designers moved their showrooms and light manufacturing into the area. The area is now known as the Design District.[12]

<u>Exterior: Mitchell Camera Corporation office building</u>

Adjacent to The Factory's north elevation there is a single-story (and basement) stucco building fronting Robertson Boulevard. Designed and built by Truscon Steel Company in 1929, the building is made of reinforced concrete and steel according to Sanborn maps. The building has a flat roof, plain parapet and no coping.

Currently visually non-contributing, the east façade has one opening that is an entrance to the building. The entrance is on the second story with a recessed porch and concrete stairs with a metal handrail and decorative metal poles attached to the floor and a recessed ceiling. The east façade is covered with a metal, textured skin. The 1929 façade had Zig-Zag Moderne decorative elements including pilasters with stepped capitals and a decorative relief course running below the parapet that may still exist under the skin.[13] (See Figure 2) The skin was likely added after the period of significance.

[11] Gierach, *Images of America: West Hollywood*, 20, 25.
12

[13] City of West Hollywood, DPR, 1987.

In 1940, Mitchell Camera Corporation built a second addition behind the 1929 stucco building. It is a single-story stucco building, adjacent to The Factory building's north façade. The 1940 addition connects to the 1929 noncontributing Mitchell Camera Corp office building. According to Sanborn maps, the 1940 addition abuts The Factory building's irregular projection. The 1940 addition has a flat roof, plain parapet, and no coping.

There are awnings, canopies, wooden fences, and concrete block walls fronting the north façade of the 1929 noncontributing building and 1940 addition. A vernacular wooden structure, with

sliding windows was built on the roof of the 1940 addition sometime between 1946 and 1953 according to Sanborn maps. This was likely done outside the Mitchell Camera Corp period of significance (1929-1946). The quality of construction does not match the integrity of the other buildings.

8. Statement of Significance

Applicable National Register Criteria
(Mark "x" in one or more boxes for the criteria qualifying the property for National Register listing.)

- [x] A. Property is associated with events that have made a significant contribution to the broad patterns of our history.
- [ ] B. Property is associated with the lives of persons significant in our past.
- [ ] C. Property embodies the distinctive characteristics of a type, period, or method of construction or represents the work of a master, or possesses high artistic values, or represents a significant and distinguishable entity whose components lack individual distinction.
- [ ] D. Property has yielded, or is likely to yield, information important in prehistory or history.

Criteria Considerations
(Mark “x” in all the boxes that apply.)

- [ ] A. Owned by a religious institution or used for religious purposes
- [ ] B. Removed from its original location
- [ ] C. A birthplace or grave
- [ ] D. A cemetery
- [ ] E. A reconstructed building, object, or structure
- [ ] F. A commemorative property
- [x] G. Less than 50 years old or achieving significance within the past 50 years

Areas of Significance
(Enter categories from instructions.)
_INVENTION_____
_INDUSTRY_____
_ENGINEERING___
_COMMERCE_____
_SOCIAL HISTORY _
_ENTERTAINMENT/RECREATION
_PERFORMING ARTS
_____

Period of Significance
_1929-1984_____
_____

Significant Dates
_1929 (Mitchell Construction)
_1974 (Studio One begins)
_____

Significant Person
(Complete only if Criterion B is marked above.)
_n/a_____
_____

Cultural Affiliation
_n/a_____ ___
_____
_____

Architect/Builder
_Truscon Steel Company
_____
_____

Statement of Significance Summary Paragraph (Provide a summary paragraph that includes level of significance, applicable criteria, justification for the period of significance, and any applicable criteria considerations.)

The Mitchell Camera factory/Studio One Disco and Backlot building (The Factory) is eligible for the National Register of Historic Places under Criteria A at the local level due to its pivotal association with the motion picture industry and LGBTQ civil rights and events that have made a significant contribution to the broad patterns of the City of West Hollywood's political and social history. Commonly known as The Factory, the Mitchell Camera Corporation factory/Studio One Disco and Backlot building was the site where the Mitchell Camera Corporation designed and manufactured technologically advanced motion picture cameras and related equipment that revolutionized the motion picture industry by introducing features to cameras that changed the way films were made. The camera movement designed and manufactured at The Factory became the sole basis for motion picture camera design until digital motion picture cameras were introduced. Mitchell Camera Corp. moved from The Factory in 1946.

After a series of uses, it was the site of Studio One disco and the Backlot Theatre where gay men socialized in an open and celebratory environment that had cutting-edge sound and light systems, and a dance floor that held well over a 1,000 dancers. Studio One and the Backlot Theatre, a cabaret, had music and comedy performances by unknowns and established stars like Patti LaBelle, Joan Rivers and Chita Rivera. Founded by Beverly Hills optometrist Scott Forbes, Studio One and the Backlot helped bridge the cultural gap between gay and straight communities by its prominence and popularity. In the early days of the AIDS crisis, Forbes donated the use of Studio One and the Backlot to host many fundraisers including one of the nation's first AIDS fundraisers put on by newly formed AIDS Project Los Angeles and hosted by Joan Rivers in 1984, no other celebrities would participate. The period of significance is 1929-1984, which encompasses the Mitchell Camera Corp. era and the Studio One reuse for LGBTQ culture. The property is eligible under Criteria A and significant under Criteria Consideration G for its exceptional significance in LGBTQ history. The Factory has a non-contiguous period of significance in two contexts (entertainment industry technology and LGBTQ recreation).

Criteria Consideration G: Studio One LGBTQ History

Studio One meets the National Register of Historic Places Criteria Consideration G because it has achieved significance and exceptional importance within the past 50 years. Studio One is exceptionally significant for its association in LGBTQ history. Studio One has been the subject of significant scholarly evaluation by academic and contemporary researchers in the field of LGBTQ Studies, and its significance has been demonstrated by this nomination's statement of significance. Scott Forbes opened Studio One in 1974. Studio One is the first gay discotheque of its kind. The popularity, prominence and influence of Studio One were pivotal in normalizing LGBTQ existence in the dominant mainstream/heterosexual society and played a role in the

development of modern West Hollywood. Properties associated with LGBT history are rare and the population is vanishing.

The disco's visibility in the venue, with the majority gay male patronage, and its influence on and attraction of heterosexuals and popular culture, as well as the mingle of homosexual and celebrity patrons in the theatre, influenced gradual social acceptance and self-affirmation of homosexuals in the Los Angeles area and the normalization of homosexuals more broadly in the early, post-Stonewall period of LGBTQ civil rights history. The post-Stonewall period of LGBTQ civil right history includes the rise of the gay entrepreneur of which Scott Forbes was one of the first. The nomination of Studio One-Backlot Theatre is especially significant because it offers the opportunity to document a part of LGBTQ civil rights history that is post-Stonewall but pre-AIDS.

Many preservationist groups have recognized the exceptional significance of Studio One. The Los Angeles Conservancy considers the potential demolition of The Factory an "Urgent Important Issue."[14] The Los Angeles Conservancy says Studio One is "a transformative discotheque" that qualifies as an historical resource for its associations with "West Hollywood's pioneering gay community…."[15] The National Trust for Historic Preservation named The Factory one of America's 11 Most Endangered Historic Places 2015.[16] The National Trust for Historic Preservation says Studio One is a "pioneering gay disco… associated with the gay rights movement throughout its history."[17]

[14] Los Angeles Conservancy, "The Factory." Accessed February 2016. https://www.laconservancy.org/locations/factory.
[15] Fine, Adrian, "Letter: Notice of Preparation for the Robertson Lane Hotel Project." Accessed May 2015. https://www.laconservancy.org/sites/default/files/files/issues/LA%20Conservancy%20Comments%20on%20NOP%2C%20Robertson%20Lane%20Hotel%20Project%2C%201.23.15.pdf.
[16] National Trust for Historic Preservation, "11 Most Endangered Historic Places: The Factory." Accessed June 2015. www.savingplaces.org/places/the-factory#.V0No0SMrJuU.
[17] Heffern, "11 Most Endangered Round-Up." Accessed June 27, 2015. https://savingplaces.org/stories/weekend-reads-11-most-endangered-round-up-featuring-gizmodo-the-advocate-and-more#.V0OXDfkrKM8.

Narrative Statement of Significance (Provide at least **one** paragraph for each area of significance.)

Criterion A Contexts: Entertainment/Recreation and Social History
LGBTQ History; Studio One – 1974-1984

> *Bathhouses and discos, rather than meeting halls or community centers, became the 'sensational glue' holding these communities together.*[18]
>
> Andrew Kopkind, journalist

After the Stonewall Riots in 1969, the 1970s can be considered the birth of the gay rights movement. Gays and lesbians now expected and demanded acceptance for who they were.[19] The GLF (Gay Liberation Front) was formed right after Stonewall; this "new breed of radicals… fashioned a new language and style of homosexuality. The accent was on pride and affirmation; they were blatant, outrageous, and flamboyant. Discarding notions of sickness and sin, they represented homosexuality as a revolutionary path toward freedom...."[20] At liberal universities, the GLF sponsored dances for gays and lesbians. The dances were meant to engender love and acceptance and to create community through hippie-style dance circles but they soon would evolve to feature mirrored balls and gogo-boys.[21]

In the very early 1970s, the gay discotheque began taking form in Manhattan. In 1971, the GAA (Gay Activist Alliance), a more moderate gay rights group, began sponsoring dances. The GAA leased a firehouse in SoHo, Manhattan as a gay and lesbian community center, and once used the space as a huge disco, bringing in 1,500 people. (See Figure 10)

The uninterrupted dancing with other men evoked the feeling "that there is only now, in this place and time."[22] Within the pulsing lights, engulfing sound, there was the "commingling of music, men, and the feeling of brotherhood."[23] The disco dance floor became the site of release. For gay men accustomed to being surveilled, harassed and arrested while dancing in gay bars, and the coming disco years would constitute a "sloughing off of centuries of shame and a venting of pent-up desire."[24]

The GLF and GAA would eventually fade away but its members would infiltrate city governments, other advocacy organizations, and many would revel at the new freedoms and adventures of "remaking our worlds."[25]

[18] Echols, *Hot Disco*, Loc 1067.
[19] D'Emilio, 247.
[20] Ibid, 243.
[21] Echols, Loc 1059.
[22] Ibid, Loc 1118.
[23] Ibid, Loc 1216.
[24] Ibid, Loc 1497.
[25] D'Emilio, 258.

Scott Forbes opened Studio One in 1974. Studio One is the first gay discotheque of its kind. The popularity, prominence and influence of Studio One were pivotal in normalizing LGBTQ existence in the dominant mainstream/heterosexual society and played a role in the development of modern West Hollywood. Properties associated with LGBT history are rare and the population is vanishing.

The disco's visibility in the venue, with the majority gay male patronage, and its influence on and attraction of heterosexuals and popular culture, as well as the mingle of homosexual and celebrity patrons in the theatre, influenced gradual social acceptance and self-affirmation of homosexuals in the Los Angeles area and the normalization of homosexuals more broadly in the early, post-Stonewall period of LGBTQ civil rights history. The post-Stonewall period of LGBTQ civil right history includes the rise of the gay entrepreneur of which Scott Forbes was one of the first. The nomination of Studio One-Backlot Theatre is especially significant because it offers the opportunity to document a part of LGBTQ civil rights history that is post-Stonewall but pre-AIDS.

> *"Studio One" was the money, power and prestige behind gay rights in the late 70's in Los Angeles, when the struggle was real.*[26]
>
> Grant Smith
> Studio One patron

Studio One was the first discotheque of its size in California that catered exclusively to gay men. Studio One ushered in a new era in gay visibility in media, popular culture and within the gay community of California and helped to mainstream the gay liberation movement. It was widely regarded as the number one dance spot, straight or gay. In 1978, owner Scott Forbes estimated that more than 10,000 people a week came to Studio One. On the weekdays the clientele was 90-95% male and on the weekend it was about 85% male.[27] Studio One took up approximately 5,000 square feet of The Factory's second floor. (Studio One and its Backlot Theatre took up the entire 12,000 square feet second floor of The Factory.)

Studio One's dance floor utilized the sawed end grain wood block flooring installed by Mitchell Camera Corp. The dance floor's official capacity was 1,000; however, Studio One employees estimated it to be closer to 1,700 people dancing almost every night. (See Figure 11 and Figure 12) The line to get into Studio One was several blocks long every night. Studio One had 84 employees, which made it the largest, single operation employment in West Hollywood at the time.[28] Studio One was owned and operated by a gay man. Most of the bartenders were Playgirl centerfolds, and outfitted in short basketball shorts.[29] Studio One had three famous staff DJs plus

[26] Smith. Facebook. February 3, 2015. Studio One Disco Nightclub - West Hollywood. https://www.facebook.com/groups/68745887988/permalink/10153493408872989/.
[27] Rocco, "Spotlight On Studio One," 6.
[28] Ibid.
[29] Roberts, "Scott Forbes," 35.

guest DJs. Lighting technicians operated the state-of-art light system by hand all night ultimately creating a dramatic and elaborate light show.[30] In 1979, it was said the lighting and sound systems were worth a half million dollars, which is over 1.5 million in today's dollars.[31]

Many newspapers and nationally circulated magazines dubbed Studio One the most exciting disco in the country. Vogue magazine said Studio One was one of the ten "in" spots of the jet set in 1977.[32] Billboard magazine named Studio One the best disco in Southern California.[33]

Billboard would also feature updates on Studio One's DJs, set lists, renovations, and the annual Disco Music Awards held at Studio One. These are the first times a gay establishment made headlines for something other than being gay. It was unprecedented to have mainstream magazines provide a gay business with such exposure. Some of Studio One's DJs were listed as top DJs in Billboard magazine. Studio One became a valuable resource for record companies and record producers.[34] They needed Studio One to promote their new artist or latest single; they needed a place to try out their music and the gay clientele at Studio One was the perfect clientele to do it with.[35] Publicists often sent their clients to Studio One to be seen and photographed.[36] Television and film studios rented Studio One for movies, shows and specials.[37] Studio One was rented for film releases and studio parties. In 1975, Columbia Pictures rented Studio One for Elton John's *Tommy* premiere. Elton John, Paul McCartney and Lucille Ball attended. Universal Studios took over Studio One for the 1976 premiere of *A Chorus Line*. Robert Wagner, Natalie Wood, and Liza Minnelli attended.[38]

> *It was exciting to be there and work that first night, and just see how happy everyone was…to have this "new" disco just for us gay men…. I'm sure all the guys coming in were amazed to see such a large dance floor, that one LONG bar, the DJ playing all that great disco music, and they must have felt like they were in heaven!*[39]
>
> Gary Mortimer
> Studio One employee

Studio One hit on the young gay community's vital need for a place like it. It was said that 90% of its clientele were gay between the ages of 21 and 35. Studio One had approximately 1,000 "members" by 1979; membership offered free entrance or discounts on special nights.[40] "It was the first time I ever went anywhere where I felt like a normal person. Like I wasn't an evil person

[30] Solomon, "Disco L.A.: Behind the Scene," G14.
[31] Baird, "It's Exciting…Sexy in Disco Whirled," CS4.
[32] Kimmel, "Leonard Grant: Bringing Hollywood Back to Hollywood," 21.
[33] Faderman and Timmons, 235.
[34] Hunt, "Disco DJ: Producer of the Beat," F14; Hunt, "Discotheques Loving the Spin They're In," T58.
[35] Lloyd Coleman interview, October 20, 2015.
[36] Ibid; Billboard articles, various.
[37] Rocco, "Spotlight On Studio One," 6; Various; Billboard, "N.A.," 30.
[38] Kilday, "Bash Follows 'Tommy' Premiere," 114; Jacobs, Jody, "Stars Step Out for 'Chorus Line,'" F2-3.
[39] Gary Mortimer interview, September 2, 2015.
[40] Grein, "Studio One Constantly Upgrading, L.A. Spot Remodels – Every Year," 46.

for being the way I was…. It was a whole different era. Studio One was the first place that made it normal and exciting and also inviting," said Lloyd Coleman, patron.[41] "I had never felt so free; so normal! I wanted this party to go on forever…" said Randall Neece about Studio One in his memoir.[42] Studio One put on elaborate theme parties like Red Night, Heavy Metal and Heat Party. During the day there was Sunday Champagne Brunch, the Gay Dating Game and aerobics classes with live DJs.[43] Studio One hosted dozens of events that required the extra space of the surrounding parking lot because of the huge in line to get into Studio One or the event would inadvertently spill out to the streets.[44] "A weekend in West Hollywood was something to look forward to every single week based on what was going on at Studio One," said Coleman.[45]

Studio One also threw huge and outrageous Halloween parties. These parties are considered to be the pre-cursor to the annual Halloween Carnival, which still takes place in West Hollywood every year. At Studio One's Halloween parties, more than 2,000 guests would converge under crystal chandeliers in huge red-and-white-striped tents set up in the parking lot. (West Hollywood park across the street served as a crowd spillage area.) Costumes were judged by clothing designers and celebrities, like Bob Mackay, interior designer Phyllis Morris, Sheldon Andelson and Alan Carr. At these parties it was said that "all the Hollywood glamour in the 70s is happening here at Studio One."[46] By the mid-1980s, Forbes was renting out the Beverly Wilshire Hotel and busing patrons between the two venues. Photos of the events appeared in local newspapers. Studio One had two staff photographers. It was unheard of to have photos of men dancing together, posing, and celebrating displayed so openly since just a few years before gays feared being outed in the newspaper.

The evening was an astonishing celebration of a simple new fact that shows no sign of going away despite conservative backlash: the majority of gays in the late 70s are out of the closet and have no intention of going back (or being shoved back) in."[47]

-Herald-Examiner newspaper

In 1977, at a Gay and Lesbian Community Services Center (GCSC) meeting and at Studio One, Scott Forbes and business partner Carol Taylor-DiPietro orchestrated a private LGBT party at Disneyland. (See Figure 13) Forbes was president of the Los Angeles Tavern Guild, an organization of several Los Angeles area LGBT bars.[48] He told the Disneyland executives that their group was the Los Angeles Tavern Guild, to make it appear that the event was for employees of non-gay Los Angeles restaurants and bars.[49] Tickets were sold at Studio One, as

[41] Lloyd Coleman interview, October 20, 2015.
[42] Neece, *Gone Today, Here Tomorrow*," 34.
[43] Studio One, Various titles, 2 pages; Studio One ephemera, Studio One, ONE National Gay & Lesbian Archives.
[44] Richard Sweigart interview, September 5, 2015.
[45] Lloyd Coleman interview, October 20, 2015.
[46] Faber, "Free Press Entertainment," 9.
[47] Cuskelly, "First Time For Gays at Disneyland, Landmark Event For Homosexuals," 1 page.
[48] Roberts, "Scott Forbes," 35.
[49] Carol Taylor-DiPietro interview, October 3, 2015.

well as many other California gay bars. Most bars closed for the night and hired buses to transport their employees and regulars to the event.[50] Disney designed the event flyers, as they did with all private party events. The headlines read "The Tavern Guild of Los Angeles and Studio One…Family Fun Party at Disneyland/Private Party at Disneyland."[51] Studio One had its name with Disney's, the icon of American purity. Disney did figure out that the party was for gays and lesbians. Forbes hosted the executives to Studio One to quell their fears.

The night went smoothly, aside from an argument between a Disney maintenance man and a gay man.[52] There were no arrests. "They really expected our party to have a lot of problems. They were expecting to have at least as many arrests as their most problematic annual private party-attended by employees of the US Postal Service," said Taylor-DiPietro.[53] Over 15,000 gays and lesbians attended the event.[54] It was the first time so many gays and lesbians shared one space for a gay private party. The Herald-Examiner called it "an extraordinary evening on anybody's scale, perhaps a landmark event."[55] (See Figure 14)

"The fact that we did a 'gay night' at all and that it came off without problems speaks for itself," said Forbes, "It's great P.R. – showing them that we're not all a bunch of screamers."[56] It was "a night that will be fondly remembered in gay history…same-sex couples walked hand in hand and arm in arm, feeling the freedom to be themselves as gay men and lesbians…"[57] said Pat Rocco, Studio One staff photographer. Other theme parks heard about the event and its financial success at Disneyland and did not need any convincing of doing an openly gay event.[58] Forbes and Taylor-DiPietro put on several more LGBT private parties at theme parks without having to hide whom the event was for.

The purpose really was to create an entity – a thing – a happening. A place where the gay community could go and have a nice dinner, see a nice show…. After the Backlot Theatre opened, celebrities started coming here and the press started coming here and the press started picking up on it and we were soon getting national publicity. [59]

-Leonard Grant

The Backlot Theatre, or better known as "the Backlot," was a semi-formal, cabaret-style theatre that had a dinner and a show. (See Figure 15) Initially Scott Forbes kept the acts gay, like female impersonators Charles Pierce and Craig Russell. Forbes didn't want to attract a straight clientele.

[50] Ibid.
[51] Studio One and Gay Night articles, ephemera, and photos, Carol Taylor-DiPietro Collection.
[52] Conlon, 36.
[53] Carol Taylor-DiPietro interview, October 3, 2015.
[54] Rocco, "Gay Night at Disneyland," 62.
[55] Cuskelly, "First Time For Gays at Disneyland, Landmark Event For Homosexuals," 1 page.
[56] Franklin, "Great American Fun on the Gay Midway," 3 pages.
[57] Rocco, "Gay Night at Disneyland," 62.
[58] Franklin, 3 pages; Carol Taylor-DiPietro interview, October 3, 2015.
[59] Galligan, "The Sweet Smell of Success at Studio One."

His experience with straight clientele at Studio One meant six hours of dancing and the purchase of only one drink. Heterosexual choreographer Ron Field understood – "whether you like his policy or not, it is the only gay discotheque that has survived more than just the fad rush in the world…. The next one that's bigger, has more lights or a better sound system, all the guys then go there. But because of Scott's policy, because of protecting his clientele, I think that's why Studio One has remained successful. I think the gay guys should have a place where they can go, where they're not ogled and stared at, that they can feel is *their* place."[60] But Forbes gave in and booked Chita Rivera.[61] Liza Minnelli promptly bought out the room. "You've never seen so many movie stars in one place except if you were at an awards show…." said Mortimer.[62]

The Backlot had an intimacy that encouraged a sense of adventure in both performer and audience and because of the subcultural status in society, gays tended, and still do, to look for, and create, entertainment that appeals to specialized tastes, i.e., camp, or that is generally obscure or undiscovered.[63] "The biggest names in the business rub elbows with the shirtless, sweating gay crowd any night of the week. Celebrities compete for the best tables in the Backlot cabaret…. It has transcended the label of a 'gay' nitespot and has become one of the spots to be in Los Angeles."[64]

At the Backlot, and Studio One, older Hollywood stars like Rock Hudson, Orson Welles, and Bette Davis would rub elbows with the new generation of stars, David Bowie, Grace Jones, Sylvester, and Donna Summer. Frequent performers at the Backlot were Bette Midler, Natalie Cole, Wayland Flowers, Rosalyn Kind, Rip Taylor, Phyllis Diller and many more. Each performer's run at the Backlot was extensively written up in the LA Times and continued to be into the 1990s.[65]

I think that the biggest thrill that I get out of Studio One is knowing that the Gay Community has something to be very proud of…. I think it's quite an accomplishment to have a place that's so well known and so respected by non-gay people. To have all these celebrities coming constantly to what is known as a Gay club shows we've come to a point where we're not looked down upon by the non-gay community.[66]

-Scott Forbes

Scott Forbes was a pioneering, gay entrepreneur. He used the brand of Studio One and the Backlot to infiltrate himself, his brands, and gay culture into the mainstream, popular culture. Forbes was a charismatic gay man from Framingham, Massachusetts. He began studying at the University of Southern California at 17 years old and eventually earned a Doctor of Optometry degree, becoming Dr. Scott Forbes O.D. Forbes created a very successful Beverly Hills practice,

[60] Galligan, "Cabaret! Stars Words," 20.
[61] Galligan, "The Sweet Smell of Success at Studio One."
[62] Gary Mortimer interview, September 2, 2015.
[63] Shewey, "The Ticket to Entertainment," 17.
[64] Roberts, "Scott Forbes," 34-35.
[65] Various ephemera and articles from Los Angeles Times and ONE National Gay & Lesbian Archives.
[66] Rocco, "Spotlight On Studio One," 6.

which included many famous clients such as musician Elton John. Forbes left his practice in 1973 to pursue his dream of offering gay men an alternative to the small, dark, nondescript bars that were scattered throughout the Los Angeles area.[67] Forbes named his discotheque Studio One in honor of the building's proximity to the Hollywood studios. (See Figure 16) Forbes invested in the latest sound systems, light, laser and strobe light systems, mirror balls and mirrors, and a neon Pegasus, Studio One's logo that hung from the factory truss beams.[68] Forbes and his investor's initial investment in the space was $100,000, which is $423,000 in today's dollars.[69] Forbes redid Studio One's interiors and updated the sound and light systems every year.[70]

Forbes magazine reported that Studio One "turns over 7,000 homosexual customers a week and grosses over a million annually" in 1976 which is 4.2 million in today's dollars. Forbes was routinely hired to consult on how to start-up and run discotheques by straight and gay disco owners. Most of the proceeds from Studio One's special events went to charity, including the proceeds from the theme park parties. One charity was the Neimeier Memorial Reward Fund, a fund established "to post rewards for information leading to the arrest and conviction of persons who murder members of the gay community."[71] Forbes was on the Advisory Board of the Los Angeles Gay Community Services Center (Los Angeles LGBT Center) and was a major donor.

"Suddenly everyone remembered that it was faggot music, that it 'sucked.'… For the rock-headed straight masses [disco] still had too many gay associations…"[72]

-Bill Brewster
Last Night a DJ Saved My Life: The History of the Disc Jockey

Brewster wrote about the coming hatred of disco and the direct association it had to gays. Soon the phrase "disco is dead" was born, which echoed a lot of hate behind the music itself and the very people who started it.

> In Chicago, radio DJ Steve Dahl hated disco so much he raised a 'disco destruction army' and mobilized it to attack disco wherever possible. His followers rallied around the overtly homophobic 'Disco Sucks' slogan and fought the evil faggot music by harassing DJs wherever it was played. 'Disco music is a disease. I call it disco dystrophy. The people victimized by this killer disease walk around like zombies. We must do everything possible to stop the spread of this plague.'[73]

The general masses had loved disco, largely because of its association with decadence, cocaine, and sex. The film *Saturday Night Fever* epitomized the very height of disco in 1977, but by 1979

[67] Faderman and Timmons, *Gay L.A.*, 234.
[68] Solomon, "Disco L.A.: Behind the Seen," G15.
[69] Galligan, "The Sweet Smell of Success at Studio One."
[70] Grein, "Studio One Constantly Upgrading, L.A. Spot Remodels – Every Year," 46.
[71] Studio One ephemera, Studio One, ONE National Gay & Lesbian Archives.
[72] Brewster, *Last Night a DJ Saved My Life*, 177.
[73] Ibid, 290.

record producers and their labels had completely over-saturated the market with disco.[74] Scott Forbes told the Los Angeles Times that he thought the media was crucial for the disco explosion, and was now instrumental in its downfall. The media was relentlessly broadcasting that discos were dying, and so people started believing it. Gay disco owners were asked about the new music trends of New Wave and Rock. Forbes and Circus disco owner Gene LaPietra had differing opinions. LaPietra welcomed the new trend, but Forbes still saw disco as lucrative for

the gays, especially now that the straights thought it was not fashionable anymore. Forbes admitted that the disco owners who jumped on the disco craze were likely to close down. Forbes though was a smart businessman and his Studio One would be one of the few to survive.[75]

"Straights want to come here, but they can't, because if they do, the gays won't feel at home…. Let someone who's straight and into that straight element open a straight Studio One. The only straight element we entice are the ones we think are compatible with the gays and that's theatre people."[76]

-Scott Forbes

Studio One doormen routinely asked for three pieces of identification from African-Americans and Latinos and even then they were denied entrance. Studio One adhered to a strict no-open-toed shoes policy for women. The Gay Community Mobilization Committee (GCMC), a coalition of gay groups and individuals made three demands of Forbes: one admission policy for *all* people, allow GCMC to monitor the door, and to post a sign that if someone was discriminated to call the printed phone number.[77]

Issues dealing with race and sex in the LGBT community were not limited to Studio One. The political and cultural changes that came from the Stonewall Inn Riots was most beneficial to middle class white gay men, some benefit trickled down to lesbians, but trans-people and people of color experienced little of the benefit. Separate organizing by people of color began within a year or so after Stonewall. In some Gay Liberation Front organizations, "Third World" caucuses formed addressing the issues of people of color; in a few cities, distinct groups were started.[78]

> White activists were challenged to expand their vision to include whole human beings instead of just slices of the self. By the early 1980s the clamor for recognition and
>
> inclusiveness had become ever present. There were few significant movement gatherings where the demands of people of color were not raised. Although the response of white

[74] Brewster, 176-77.
[75] Hunt, "Disco Clubs: Down But Not Out," G1, G4.
[76] Galligan, "The Sweet Smell of Success at Studio One."
[77] The Gay Community Mobilization Committee. Flyers of Studio One boycott. Studio One, ONE Subject File collection, ONE National Gay & Lesbian Archives.
[78] D'Emilio, *Making Trouble*, 260-61.

> organizations was limited, the level of discomfort was rising dramatically. – John D'Emilio in his essay "After Stonewall"[79]

There was a lack of support of the Studio One boycott from established gay groups, like the Metropolitan Community Church (MCC). In fact, Reverend James Sandmire denounced the boycott during one of his sermons.[80] As early as 1977, Forbes had given his name, money, and space to several gay groups; something which would soon become synonymous with the name Studio One.[81] Forbes at the time was on the Board of the Directors at the Los Angeles Gay and Lesbian Center.[82] The picket lines soon ended.

There was a follow-up article in the Los Angeles Times. It started with: "To enter a discotheque is to step into a metaphor for urban America. The moment we pass beyond the gatekeeper's careful inspection and through the well-guarded doors."[83] This practice has become known as the velvet rope policy and it is still in effect today in many straight nightclubs in metropolitan cities. The velvet rope "could either caress you as you walked by, or give you rope burn."[84]

In a 1976 interview with The Advocate, Forbes openly said that the biggest problem with running Studio One was keeping it gay. "Scott didn't want it to be overtaken," said Carol Taylor-DiPietro, Forbes' long-time friend and business partner, "One of the ways we kept it gay was by enforcing the 'no open-toe' shoe policy. He told people the policy was for safety reasons, because of possible broken glass, but it was really intended to keep straight women out."[85]

Forbes insisted that Studio One had a "uniform," strict ID policy, which also denied entrance to intoxicated people, and people who smelled bad. He continued to say that when they initially opened, straight black men were coming to pick up the women in the club, which he stated "was the problem with any straight club…the bad element came." When questioned on the "bad element" he snapped and shouted "straight people" and went on to explain that straight people did not go to discos too much, and for that reason would get rowdy and aggressive, whereas gays were at discos like Studio One every night.[86] Straight disco owner Henry Berger admitted to the Los Angeles Times that gay discos were attractive to straight women because of the "meat market" mentality at straight discos.[87] Straights did stage a one-week takeover of Studio One in the 1980s. And three straight couples drove a Rolls Royce into Studio One's front entrance in protest of being denied entrance.[88]

> If police harassment and archaic laws had been the main obstacle to gay nightlife before disco took off, it was now the chic appeal of gay disco among fashionable and fashion-

[79] Ibid, 261.
[80] Johnson, "Studio One Hit With Charges of Racism, Sexist Discrimination," 2 pages.
[81] Los Angeles Times, "McKuen to Play Benefit Sunday," C11.
[82] N.A., "Gay Community Services Center," 1 page. Studio One and Gay Night articles, ephemera, and photos, Carol Taylor-DiPietro Collection.
[83] Slater, "Discotheques Dance to Another Tune," G1.
[84] Litton. Facebook. July 31, 2016. Studio One Disco – West Hollywood. https://www.facebook.com/groups/68745887988/.
[85] Carol Taylor-DiPietro interview, October 3, 2015.
[86] Slater, "Discotheques Dance to Another Tune," G1, G4.
[87] Gindick, "Club Troubleshooter: Doctoring the Discos," F6.
[88] Echols, *Hot Stuff*, Kindle edition, Loc 1254 of 5604.

hungry heterosexuals that was thwarting the brotherly reverie of dance-floor oneness that gay men were chasing – Alice Echols, *Hot Stuff: Disco and the Remaking of American Culture*[89]

"[AIDS] is here and it's occurring in the community. We just can't close our eyes to it. We have to do what we can to help"[90]

-Scott Forbes

AIDS was devastating to West Hollywood. By 1981, West Hollywood's population was approximately 40% LGBT, primarily gay men. In 1983, it was reported by the Los Angeles Times that half of the AIDS victims came from the Hollywood/West Hollywood area. Health officials warned gay men "to be careful about traditional 'pickup' places like bathhouses and singles bars." After intense social liberation and sexual liberation, gay men were now uttering the words "My mother was right" or "My minister was right." By 1982, Studio One's attendance went down because the patrons were either dying of AIDS or were too scared to go out. The Los Angeles Times in 1983 reported that attendance in gay clubs was down 20%.[91] Many gay clubs closed and others tried to reinvent themselves like Studio One. Some of the small clubs were able to survive because the overhead was lower. Like other clubs in the area, Studio One started 18 and over nights, which brought a new generation into Studio One.[92]

Forbes offered Studio One and the Backlot numerous times for fundraising efforts. Studio One had fundraisers for AIDS hospice care and medications, and AIDS research as early as 1982. A fundraiser in 1983 brought in $8,000 for AIDS research.[93] One of the most famous fundraisers and one of the first major fundraisers was on March 11th, 1984.[94] It was hosted by Joan Rivers, who at the time was the only celebrity willing to lend her name to help any cause having to do with AIDS.[95] (See Figure 17) Rivers was an early pioneer when it came to helping AIDS victims, before Elizabeth Taylor, and before Princess Diana. Rivers could not get other celebrities to perform with her (even though the club had been routinely filled with them.) Rivers had already hosted a number of AIDS fundraisers.

"There were people there literally with guns. There were death threats. It was very, very weird. But we did it, and that was the first AIDS benefit – the first major AIDS benefit probably – in the United States," Rivers said. Both Forbes and Rivers hired security in response to death threat

calls before the event.[96] The event was to raise money for APLA, Aid for AIDS, and Shanti Foundation Los Angeles. The audience was almost all composed of gay men since most straight people (including celebrities) did not want to be around gay people, fearing they would get sick

[89] Ibid.
[90] Citron, "AIDS Haunts Gay Sex Life," WS6.
[91] Ibid, WS1, WS6.
[92] Richard Sweigart, September 5, 2015.
[93] Citron, WS6.
[94] Los Angeles Times, "Joan Rivers Sets AIDS Benefits," I6.
[95] Fox, "Hollywood Powers Help AIDS Victims," W3.
[96] Holston, "Expect No Pitch from Joan Rivers at AIDS Concert," 1E.

from AIDS. Some celebrities donated money but often wanted to remain anonymous. The fundraiser raised $45,000 (equivalent to $104,309 in 2015).[97] After that event, Studio One and the Backlot would hold AIDS fundraisers practically every weekend.[98]

Forbes closed Studio One in 1993. Forbes died at the young age of 57 in 2002 from complications due to elective surgery. In lieu of flowers at his funeral, the family asked people to give donations to the West Hollywood Sheriff's Station Fund.[99] The February 4th 2002 West Hollywood City Council meeting was adjourned in Forbes' name.[100]

Bill Miles, Forbes' life partner, told the Los Angeles Times for an obituary article that Forbes designed the club to fill a void in the community: "Scott thought it right that gays have a place to go that was a dynamic spot, a place of prominence in the community." The Times called Forbes "a leading figure in the social history of West Hollywood."[101]

Criterion A Contexts: Invention, Engineering, Commerce, Performing Arts
Mitchell Camera Corporation – 1929-1946

Mitchell Camera Corp broke ground on their new factory on January 21, 1929. They hired the Youngstown, Ohio-based, design-build firm Truscon Steel Company to design and build a factory and office building at 661-665 North Robertson Boulevard in West Hollywood, CA.[102] This area of West Hollywood at the time was a made up of mostly single-story, industrial buildings with a few small, residential structures; one city-block east of the Pacific Electric Railway Company's Sherman/West Hollywood massive rail yards, shops and car barns.[103] In attendance at the groundbreaking ceremony were the West Hollywood Chamber of Commerce President and Secretary, two engineers from the Truscon Steel Company along with Mitchell and Boeger.[104] (See Figure 8)

The Factory building was designed with function dictating its form, a Kahn Daylight Factory hallmark. Julius Kahn, a structural engineer, founded Truscon Steel Company in 1903 using the materials and products (most importantly the Kahn Bar)[105] he had perfected while working with Albert Kahn, the foremost American industrial architect of his day. The Kahns perfected the Daylight Factory construction and design, which became known as the Kahn Daylight

Factory.[106] The Kahns collaborated on many automobile factory plants such as Ford and Packard.[107] The design of The Factory building gave key consideration to the comfort and full

[97] AIDS Project Los Angeles (APLA), "History." Accessed December 2015. http://www.apla.org/about-apla/history.html.
[98] Lloyd Coleman interview, October 20, 2015.
[99] Thurber, "Obituaries; Scott Forbes, 57; Ran Dance Palace," B15.
[100] City of West Hollywood, "City Council Minutes." February 4, 2002. http://www.weho.org/Home/ShowDocument?id=8678.
[101] Thurber, B15.
[102] American Cinematographer, "The Mitchell's New Home," 34.
[103] Sanborn Fire Insurance Atlas, Los Angeles 1906-Jan 1950, Vol 20, 1926, Sheet 2048.
[104] American Cinematographer, "The Mitchell's New Home," 34.
[105] Sedlar, Frank, "Engineering Industrial Architecture: The Trussed Concrete Steel Company and Albert Kahn.". Accessed July 2015. https://deepblue.lib.umich.edu/bitstream/handle/2027.42/98436/Sedlar_Engineering_Industrial_Architecture.pdf?sequence=1. Pages 3, 5, 10, 12.
[106] ArchiTakes, "Detroit: City of the Future." Accessed March 2015. http://www.architakes.com/?p=11139.
[107] Sedlar, 25.

efficiency of the workmen- large factory windows for maximum natural light and ventilation and large, uninterrupted factory floor. Mitchell also had installed the sawed end grain wood block floor to reduce floor vibration, and a motor at every workstation, eliminating hanging cables and belts. And with having the building designed with a metal and glass skin on a steel frame made the building earthquake and fireproof. The Factory building alone cost $60,000 ($823,902 in 2015).[108]

International Photographer proclaimed, "Hollywood can well be proud of this plant as it will be the largest factory in the world manufacturing exclusively standard professional motion picture cameras."[109] American Cinematography and International Photographer magazines ran photos on their back covers of the progression of the factory's construction until it was complete. (See Figure 1, Figure 6, Figure 7) A 1934 Mitchell Camera Corp catalog (See Figure 9) shows that the first floor of the factory was for camera manufacturing, while the second floor was devoted to the accessory department.

By the time the Mitchell Camera Corp factory and offices were complete, the Academy of Motion Picture Sciences had gotten involved in the film industry's problems with development and standardization. After prolonged consideration of the transitional period between silent films and talkies, it was agreed, in 1930, that it all came down to three major problems– silencing the arc lamp, silencing the camera movement, and constructing soundproof set material.[110] In response, Mitchell Camera Corp made changes to their existing Mitchell Standard to make it quieter by changing metal gears to Bakelite gears, and taking out ball bearings wherever possible. American Cinematographer reported that RKO Studios was using the improved Mitchell Standard camera out in the open, not in a camera booth as was previously required.[111]

During the first year at their new factory in West Hollywood, most focus of the Mitchell Camera Corp was manufacturing and aggressively marketing their new 70mm Mitchell-Grandeur (aka Fox-Grandeur) camera. The cameras were originally built for Fox Film, in Fox Film's attempt to corner the market on wide-screen films. Fox Film ordered fifty cameras. By January 1931, Mitchell Camera Corp had substantially completed sixteen cameras and had thirty-four more in various stages of completion when the Hearst Company bought Fox Film, which forced Mitchell Camera Corp to sell the finished cameras to other studios.

According to a consequent lawsuit between Mitchell Camera Corp and Fox-Hearst Company, two 70mm Mitchell-Grandeurs were sold to Metro-Goldwyn-Mayer, one went to Feature

Productions, and four were sold to Fox Film but it is rumored that Fox Film had close to eight Mitchell-Grandeurs.[112] The films shot on the Mitchell-Grandeur were Fox's *The Fox Follies*,

[108] American Cinematographer, "The Mitchell's New Home," 34.
[109] The International Photographer, "New Mitchell Factory."
[110] Bordwell and Staiger, *The Classical Hollywood Cinema*, 299.
[111] American Cinematographer, "Taking the Click Out of Cameras," 22.
[112] "Mitchell Camera Corp. v. Fox Film Corp.," accessed March 9, 2015. http://socal.stanford.edu/opinion/mitchellcameracorpvfoxfilmcorp24998.

Happy Days, *Song O' My Heart*, John Wayne's first film *The Big Trail*, and MGM's *Billy the Kid*.[113]

By 1931, Mitchell Camera Corp created a new, experimental camera called the Mitchell NC (News Camera), also known as the Mitchell Sound Camera. The Mitchell NC was officially released in 1932, U.S. Patent 1,930,723. The new intermittent mechanism of the NC eliminated gear meshing and employed eccentrics and sliding surfaces, an ingenious way to avoid some of the noise from the mechanism. The construction of this movement demanded extreme tolerances of the parts, which were machined and lapped to .0001 inch and polished to a .0005 inch tolerance in the register pins. Mitchell cameras were machined with finer tolerances than the most expensive Swiss watch but were built like a tank.[114] The inventor of the NC film movement mechanism is stated as "George A. Mitchell, Los Angeles, Calif., assigner to Mitchell Camera Corporation, West Hollywood, Calif." [115]

Ira B. Hoke, camera operator and technician, wrote this about the Mitchell NC – "considering the multitude of noise-contributing factors necessary to the construction of this type of machine, the builders have been extraordinarily successful in their undertaking. From the cameraman's standpoint the new Mitchell is ideal. To the sound man it will offer no obstacle to perfect recording, and the producer will find that time sacred by the use of this modern photographic equipment will quickly repay the initial outlay."[116]

The Mitchell NC included a noiseless movement, a hand dissolve (instead of the automatic shutter), a miniature reference shutter, a buckle trip and the improved monitoring viewfinder conceived at the end of the twenties with upright image and built-in mattes but eliminated the floating iris system, very little used after the end of the silent films. But its most valued feature was its near silent operation at 35dB.[117] (10dB is the threshold for hearing, 20dB is a whisper, and 30-35dB is twice as loud as a whisper.)

William Stull of American Cinematographer said of the new Mitchell NC – "it was clear that other camera companies were only making alterations to an inherently noisy mechanism but it was Mitchell Camera who built a completely new device, one that marked a great step forward in cinematographic engineering and practice."[118] In American Cinematographer, Mitchell Camera Corp advertised the NC as a "camera designed for studio use…an entirely new camera built to the high standard of Mitchell products…it has new features not previously offered in a professional motion picture camera, and has been quieted so that the use of a heavy blimp is not necessary."[119] The Mitchell Camera factory in West Hollywood made approximately 150 Mitchell NCs from 1932 to 1938.[120]

[113] Mitchell Camera Corp Ad, "Mitchell Wide Film Cameras," American Cinematographer back cover.
[114] Roberts, "The Mitchell Camera: The Machine and Its Makers," 141.
[115] Mitchell, U.S. Patent 1,930,723: Film Movement Mechanism. Filed January 11, 1932, published October 17, 1933.
[116] Hoke, "Mitchell Silences Sound Camera," 12.
[117] American Cinematographer, "Cameraman Want Silence," 22.
[118] Stull, "The Silent Mitchell Camera," 22.
[119] Mitchell Camera Corp Ad, "Announcing the New Mitchell Silenced Cameras," American Cinematographer back cover.
[120] Hoke, "Mitchell Camera Nears Majority," 496.

International Photographer proclaimed that, "times have changed. Now the cinematographer can go back to the methods that he used before sound. Hard lights are again being used and his camera is being released from its cell. Scenes which were called impossible then are now being shot without trouble."[121]

The Mitchell NC was soon the preferred camera of most Hollywood studios, newsreel and short film companies and film producers. Orders for the Mitchell NC also poured in from London, Berlin, Calcutta, Bombay, Tokyo, Buenos Aires, Mexico City, Manila, and Moscow. Mitchell cameras were more expensive than many other brands on the world market, but its particular design features and outstanding workmanship made it worth the higher price.[122]

However, the NC model still required the use of a blimp for extreme close-ups. Harold Rosson (*Wizard of Oz*), one of the first cinematographers to use the experimental Mitchell NC, said "this camera is satisfactorily silent for most work except extreme close-ups, or scenes recorded at a very low volume-level." Most studio camera departments made their own blimps. The use of a blimp was a limitation and a time-consuming operation for the camera crew; framing and focus checking, changing lenses, footage control, and adjusting the shutter could only be done through the blimp's opening.[123]

Master cinematographer Gregg Toland's (*Wuthering Heights, Grapes of Wrath, Citizen Kane*) use of the Mitchell NC received accolades for his treatment of close-ups in the film *Les Miserable*. American Cinematographer called it "a revelation in artistic conception and courage" for a previously impossible endeavor because of noisy cameras.[124] Toland was known for his surprisingly original and ingenious take on the mechanical side of his profession so George A. Mitchell enlisted Toland's help in conceiving a truly silent studio camera. Toland worked with the engineers at the Mitchell Camera Corp factory to develop a camera prototype with Mitchell NC's features but completely silent.[125] In 1934, after several trials, the new Mitchell BNC (Blimped/Blimpless New Camera), also known as the Studio Model, was introduced, U.S. Patent 2,088,714. The inventor of the BNC or "Sound Insulated Motion Picture Camera" is stated as "George A. Mitchell, Los Angeles, Calif., assigner to Mitchell Camera Corporation, West Hollywood, Calif."[126]

[121] Clark, "Before and After Sound," 34.
[122] Raimondo-Souto, *Motion Picture Photography*, 143-44.
[123] Ibid, 144.
[124] Toland, "Intensive Preparation Underlies Toland's Achievements," 247.
[125] Raimondo-Souto, 144.
[126] Mitchell, U.S. Patent 2,088,714: Sound Insulated Motion Picture Camera. Filed May 7, 1934. Published August 3, 1937.

The Mitchell BNC was lighter than an NC with a blimp, 120lbs versus 173lbs (permitting a greater freedom and flexibility of camera choreography), and the movement's operating noise level dropped to just 21 dB, a whisper.[127] International Photographer said of the Mitchell BNC, "convenient foolproof operation…no blimp is necessary, hence, there's no shooting through glass and all controls of the camera are on the outside."[128] Prolific cinematographer, L. William O'Connell, said in American Cinematographer, "they're simply such a perfect instrument for the work at hand that I never have to give the camera thought. It's there – it does its work perfectly – so perfectly I'm never conscious of its presence."[129]

After his inventions of the Mitchell NC and Mitchell BNC, George A. Mitchell resigned from Mitchell Camera Corporation in 1934. In 1953, Mitchell would receive an honorary Oscar "for the design and development of the camera which bears his name and for his continued and dominant presence in the field of cinematography."[130]

The major Hollywood studios purchased or rented the Mitchell BNC – Samuel Goldwyn Studios bought the first two cameras made; United Artists rented a Mitchell BNC for Gregg Toland to shoot *Wuthering Heights* for which he won an Academy Award for Cinematography; RKO rented the Mitchell BNC for Toland to shoot *Citizen Kane*; Warner Brothers purchased ten Mitchell BNCs.[131] (See Figure 18)

Mitchell Camera Corp's new vice-president, movie producer and motion picture pioneer, Charles H. Christie, cultivated a world-market for Mitchell cameras. By 1935, Mitchell Camera Corp opened agencies in Sydney, London, Bombay, Rome, and Osaka.[132]

In a series of advertisements, cinematographers praised the Mitchell BNC – Ernest Haller (*Jezebel, Gone With the Wind, Mildred Pierce, Rebel Without a Cause*): "Everything a cinematographer could want for the finest photography is embodied in the Mitchell Studio Camera"; Sol Polito, (*The Private Lives of Elizabeth and Essex, Sergeant York, Now Voyager*) "I have been using Mitchell Cameras since 1920 and in my opinion the new Mitchell Studio Camera is perfect"; Arthur Edeson (*All Quiet on the Western Front, The Maltese Falcon, Casablanca*), "Silent—convenient—dependable, the Mitchell Studio Camera answers today's exacting demands"; Charles B. Lang (*A Farewell to Arms, Sabrina, Some Like it Hot*), "In the studio and on location the speed and the convenience of the Mitchell studio camera made photographing '*Sundown*' doubly a pleasure."[133]

[127] Raimondo-Souto, 144.
[128] The International Photographer, "Cinematographer," 9.
[129] Stull, "Mitchell Blimpless Cameras Really Silent," 167.
[130] Academy of Motion Picture Arts and Sciences, "The 25th Academy Awards Memorable Moments." Accessed August 15, 2016. https://www.oscars.org/oscars/ceremonies/1953/memorable-moments.
[131] Raimondo-Souto, 144-45.
[132] The International Photographer, "After a World's Market," 3.
[133] Mitchell Camera Corp Ads, "Satisfied Mitchell Camera Users," various back covers.

"Describing the Mitchell Motion Picture Camera: The Camera That Advances with the Industry" is how Mitchell Camera Corp described their cameras in their 1934 catalog. At that time their "roll call" of Mitchell camera users included –

Charles Chaplin Studios	Metro-Goldwyn-Mayer Corporation
Columbia Pictures Corp	Monogram Pictures
Educational Studios, Inc	Paramount Productions, Inc
Fox Film Corp	R K O – Pathe Studios
Bryan Foy Studios	R K O – Radio Studios
General Service Studios Inc	Hal E. Roach Studios
Samuel Goldwyn, Inc, Ltd	Mack Sennett, Inc
International Film Studios	Twentieth Century Pictures, Inc
Harold Lloyd Company	United Artists Studio Corporation
Majestic Productions	Universal Pictures Corporation
Mascot Pictures Corp	Warner Bros. Productions Corporation

Their "roll call" continued to list other studios, general service departments, including Eastman Kodak Company, R C A – Victor Co, and the United States Navy and the United States Army, and foreign service departments around the world.[134]

Orson Welles' *Citizen Kane* was released in 1941. American Cinematographer said, "it is the first production in which dialogue, sound, music and true motion picture technique are welded together to form a genuinely complete unity."[135] Gregg Toland, as cinematographer, said the Mitchell BNC allowed him to experiment with extreme depths of field or "deep-focus cinematography," camera angles, lighting that produced high-contrast tonality, and long takes. Along with new developments in film and lenses, it was with the Mitchell BNC that Toland "begins to evolve a radically new cinematographic style that develops to its full maturity in *Citizen Kane*."[136] (See Figure 19)

LIFE magazine did a nine page spread on Orson Welles and *Citizen Kane*. *LIFE* magazine said this about the working relationship between Orson Welles and Gregg Toland –

> Gregg Toland, ace Hollywood cameraman who accomplished the technical brilliance of *Citizen Kane*, tells how willingly Welles seized upon every new suggestion. During the 27 weeks of shooting, Welles spent countless hours with him, planning, plotting, experimenting with inexhaustible patience for new camera angles, new compositions, new light effects, new settings that would make for power and economy, for emotional intensity and utter realism.[137]

[134] Mitchell Camera Corp, *Mitchell Motion Picture Cameras*, 4-5.
[135] American Cinematographer, "Photography of the Month," 222.
[136] Carringer, *The Making of Citizen* Kane, 73.
[137] LIFE Magazine, "Orson Welles," 108.

LIFE magazine in the last seven pages of the article, illustrated Toland's new techniques he perfected with the Mitchell BNC, including "pan focus," frame composition where Toland dressed the entire frame for a shot or lit only a portion of the frame in order to connote a certain mood, creating a low ceiling by Toland shooting from a hole in the floor to create the mood, the tight grouping of big figures in the foreground and sharp focusing on action in the background, remarkable depth of field where it was marveled that "scenes sometimes traversed two 100-ft. sound stages," and using special lens coating to cut light flares in the projection room scene. A seven page spread focusing on camera techniques of the cinematographer was unheard of before *Citizen Kane*. One page is even devoted to Toland's tricks with light like using natural candlelight in a scene from Bette Davis' film *Little Foxes* (also shot on a Mitchell BNC).[138]

In 1945, *LIFE* magazine did a nine page spread of filmmaking. This time it centered on the process of "movie making" – the set, the take, camera, lights, lab, sound, and the film vault. A photo of the Mitchell BNC takes up most of the page with a camera operator behind its viewfinder under the "camera" section; the significance of this focus on the Mitchell BNC illustrates the importance of this machine and its impact on filmmaking.

The text calls the camera "the most important piece of apparatus in Hollywood. The whole great big motion-picture industry exists solely for the purpose of paying court to the black-hooded machine shown above."

The article continues –

> This is the latest and best model camera. It costs about $10,000 and is made in West Hollywood, Calif. By the Mitchell Camera Co. Warner Bros. has nine others just like it which are kept in an air-conditioned vault. Film runs through at 90 feet per minute, must nevertheless be stopped about once a second so that it may be exposed frame by frame. This calls for a great number of smoothly operating gears and sprockets finished to 1/10,000 of an inch. The most astonishing thing about the whole electrically run machine is that it operates in total silence, for if it whirred or clicked in any way the noise would be picked up and recorded along with the actors' voices.[139]

According to Toland in American Cinematographer, *Citizen Kane* was "the starting-point of some new ideas in both the technique and the art of cinematography."[140] But even before *Citizen Kane*, Toland was experimenting with the Mitchell BNC on John Ford's film *The Long Voyage Home*.[141]

The capabilities of the Mitchell BNC enabled the development of a new artist – the cinematographer. The Mitchell BNC made the craft of the cinematographer easier so that he

[138] Ibid, 110-116.
[139] LIFE Magazine, "Movie Making," 68-77.
[140] Toland, "Realism For 'Citizen Kane,'" 54.
[141] Carringer, 74-75.

could focus on the artistry that the camera and his eye provided. The cinematographer painted a picture with lights and shadows; the Mitchell Camera recorded the picture exactly as the cinematographer painted it.[142] By 1939, there were 19 Mitchell BNCs made and used by all the major studios; there was a total of at least 30 Mitchell BNCs made at the Mitchell factory in West Hollywood. (See Figure 18)

In the run up to World War II, part of design and production focus at the Mitchell Camera Corp factory began to shift toward the war effort. Even before the U.S. officially became involved in World War II, Mitchell Standard cameras and Mitchell NCs were being used to film Marine Corps, Navy, and Air Force training films.[143] (The Mitchell Standard was also called the "High Speed" camera because it could operate up to 128 frames per second; its precision was consistent and predictable. During and post-World War II, the U.S. government called it the "GC.")[144] Photographic Unit officers were called into active duty, including Gregg Toland and director John Ford.[145] Mitchell Camera Corp had developed and manufactured the chronograph "GC" camera which led to the development of specialized "government cameras" used in World War II, including an aerial tracking camera, a triangulation camera, and a split magazine camera.[146] Mitchell cameras were in the nose cones of the B-25 Bomber airplanes; a Mitchell camera filmed the first daylight bombing raid over Germany.[147] A Mitchell BNC that was sent to the Soviet Union during World War II also shot the notable Russian film *Ivan the Terrible* (1945). A Mitchell Standard camera was used to film the test "dummy bombs" and, more notably, the Trinity Site atomic bomb test in 1945, as part of the Manhattan Project.

On July 16, 1945, the photographer, Berlyn Brixner, sat behind a Mitchell Standard (made at the West Hollywood factory) to film the world's first nuclear explosion. Before the bomb was dropped on Hiroshima, Brixner was dispatched to Washington, D.C. to deliver the 35mm motion-picture negative films to the Manhattan Project director, expressly for use in newsreels.[148]

Mitchell Camera Corp was also heavily involved in the next groundbreaking filmmaking event after sound – color. A Mitchell camera movement was in the early Technicolor three strip cameras; in the beginning, Mitchell Camera Corp in West Hollywood, was also manufacturing the cameras for Technicolor. *Gone with the Wind* and *Wizard of Oz* were filmed with Technicolor cameras containing Mitchell camera movements and manufactured by Mitchell Camera Corp.[149]

Mitchell Camera Corp also developed new camera devices and attachments at the West Hollywood factory. They manufactured universal magnifying view finders, including an inverted

[142] Mitchell Camera Corp Ad, "The Expert Cameraman…," The International Photographer, September 1937, 15.
[143] Stull, "Hollywood's Own Film Unit Volunteers to Film the Navy," 166-167.
[144] Roberts, 146-147.
[145] Stull, 166.
[146] George Worral interview, Johnson Heumann Research Assoc, DPR notes, 1987.
[147] Joe Dunton interview, Kate Eggert, 2015.
[148] Berlyn Brixner's interview, Manhattan Project Voices, February 1992.
[149] The Editor (The International Photographer), "A Cinema World Wonder," 84.

image view finder, erect image view finder, erect image view finder with built-in mattes, view finder support, and adapters and brackets for various sizes of photographic lenses. (The Mitchell view finder was first designed with cinematographer Tony Gaudio and Bausch and Lomb in 1922.)

Other items designed and manufactured at the West Hollywood factory included the standard tripod base, rolling tripod with the height of the camera controlled by single crank, baby tripod, still camera tripod, friction tilt and panorama, low mount or tilthead adapter, quick release friction head, an improved camera motor and motor adaptor, buckle proof magazine, dummy camera and projection lamp, gear hobber, gear box and extension shaft, electric trip switch, matte cutting device, variable diffuser, Mitchell camera carrying case, Mitchell magazine carrying case, Mitchell accessory carrying case, Mitchell Sound Recorder, Mitchell Background Projector.[150]

Mitchell Camera Corp received an Academy Award for Technical Achievement in 1939, 1966 and 1968. George A. Mitchell received an Academy Honorary Award in 1952 by the Academy of Motion Picture Arts and Sciences.[151]

Mitchell Camera Corp left the West Hollywood factory building in 1946. They moved into a bigger factory building in Glendale, CA. At that time, they had over 200 employees. Mitchell Camera Corp built approximately 150 Mitchell NCs from 1932 to 1938. And by 1940, there were more than 20 Mitchell BNCs in use in Hollywood and internationally.

Since its introduction in 1932, the Mitchell NC movement became the standard design from which later Mitchell movements evolved. The Mitchell NC movement was used in Mitchell camera models NC, BNC, BNCR, and 205-R; a miniaturized NC-type movement was used in the compact types of Mitchell 35-mm cameras, models R35, Mark I, Mark II, S35R, S35RB, S35RC, Mark II, and in Mitchell 16-mm cameras.[152]

According to Leo Enticknap in his book *Moving Image Technology: From Zoetrope to Digital*, "basically updated and heavily modified versions of the 1934 Mitchell BNC, and the 1937 Arriflex, represent the final stage in the development of (camera movement) fundamentals before the industry goes digital (in the 1990s)." In the mid-1960s, the first cameras produced by Panavision were retrofitted Mitchell BNC cameras. All standard 35mm cameras made by Panavision to this day are based on the Mitchell movement.[153]

Mitchell Camera Corp moved from Glendale to a factory in Sun Valley, California sometime between 1970 and 1975. In 1979, Mitchell Camera Corp stopped all manufacturing and closed the Sun Valley factory.

[150] Mitchell Camera Corporation Ads, various in American Cinematographer and The International Photographer, 1929-1946.
[151] Internet Movie Database. Various titles, production companies, directors, cinematographers, and actors. http://www.imdb.com.
[152] Roberts, 144.
[153] Enticknap, *Moving Image Technology*, 44.

Background Context: History of West Hollywood, California

The City of West Hollywood had its beginning as a small community associated with the railroad. Laid out first as a rail yard for the Los Angeles Railway, a town began to develop as land around the yard was subdivided. Largely agricultural at first, the town of Sherman began to take shape. Sherman's growth accelerated after the arrival of the motion picture industry in the late 1910s. Its location between Hollywood, home to the burgeoning industry, and Beverly Hills, a new residential haven for Hollywood's elite, made Sherman an attractive place for those in the motion picture industry, stars and workers alike, to unwind. It was this location between Hollywood and Beverly Hills that would drive much of the town's development in the first decades of the twentieth century."[154]

Hollywood's stance as a "dry town," which was enforced even more strictly after the beginning of Prohibition, led motion picture industry workers and stars to seek entertainment elsewhere. Neighboring Sherman became attractive as a nighttime haunt, in part due to its location in unincorporated county and the relatively lax oversight by the Sheriff's Department.[155]

From the time Sherman adopted the name West Hollywood in 1925 until the end of World War II, the up-and-coming town transformed into the home of some of Hollywood's most famous gathering spots. The growth that began in the first half of the 1920s continued during the second half. Dubbed the Sunset Strip, this stretch of unincorporated county road became synonymous with Hollywood glamour. Santa Monica Boulevard became part of Route 66 during the decade; the street retained its more working class character in comparison to the glamour that was taking root on Sunset Boulevard. During the same period, a modest commercial district developed along the streets south of Santa Monica Boulevard – Beverly Boulevard, Melrose Avenue, and Robertson Boulevard.[156]

The motion picture industry had significant impacts on the commercial and industrial development of West Hollywood in the 1920s and 1930s. Neighboring Hollywood was the nucleus of the motion picture industry by the 1920s. West Hollywood's leading industries in the 1920s and 1930s were film and related industrial production, including the manufacture of motion picture cameras, radios, and building hardware. Among these businesses was the Mitchell Camera Company, which would become an innovative producer of cameras and sound equipment that enabled the development of sound pictures and cinematography. Mitchell moved to an industrial area of West Hollywood in 1929 and constructed a factory using designs from the Truscon Steel Company of Ohio. From the new factory in West Hollywood, Mitchell grew to dominate the camera industry in Hollywood.[157]

[154] GPA Consulting, "City of West Hollywood: Commercial Historic Resources Survey," 16.
[155] Ibid, 25
[156] Ibid, 34.
[157] Ibid, 34-5.

As the center of the entertainment industry, Hollywood naturally attracted an artistic community, which was drawn by the freedom it encouraged. Members of what is today identified as the LGBTQ community were among those attracted to Hollywood. Los Angeles' reputation as a frontier town with more liberal social standards than the East Coast or Midwest also enticed many who were part of the LGBTQ community to move West. This reputation lasted into the 1920s, by which time the motion picture industry became its own draw.[158]

The onset of the Great Depression in the 1930s brought about a more culturally conservative climate in America. Many Americans blamed their hard times on the excesses of the 1920s, particularly the hedonistic culture they associated with being gay, lesbian, or bisexual.[159] Demands for greater censorship in film ignited a justified fear of government intervention among studios and producers. To quell the reformist protests, William Hays, President of the Motion Picture Producers and Distributors of America (MPPDA) organization, joined forces with studio executives in 1930 to create the Production Code, a doctrine of self-censorship designed to preempt government interference, promote conservative politics, and keep Christian critics at bay. By the mid-1930s, Hollywood had transitioned from a place of relative freedom for the LGBTQ community to a place of certain fear and prejudice.[160]

The censorship in Hollywood in the 1930s and crack down on portrayals of any type of homosexuality, including men as effeminate or women as masculine, drove many over the county line to seek refuge in West Hollywood. The town, situated in unincorporated county territory, enjoyed relatively less supervision from the Los Angeles County Sheriff's Department than Hollywood did from the Los Angeles Police Department, and bars and nightclubs catering to LGBTQ clientele began to crop up in the 1930s. For example, there was the Footlight Club at 7746 Santa Monica Boulevard Another nightclub, which featured cross-dressing entertainers, such as male impersonator Tommy Williams.[161]

In the post-World War II period, the area around The Factory became the center of region's creative communities. West Hollywood emerged as the center of the interior design industry for the West Coast. Several prominent decorators, art directors, and other figures in the design industry lived and worked in West Hollywood, giving the area a reputation as the center of the industry's most established tastemakers. Property owners and enterprising real estate agents made conscious decisions to attract design industry tenants to specific commercial corridors in West Hollywood. Land and small industrial buildings in this area were relatively inexpensive and undeveloped still in the late 1940s, creating opportunities for the large and flexible warehouse-like spaces needed by the industry to display furniture, carpets, tiles, and fabrics. Herman Miller, a furniture manufacturer, opened a showroom at Beverly and Robertson in 1949; the building was designed by Charles Eames.[162] By the 1950s, design industries spread north to Melrose Avenue, south on Robertson Boulevard. Several design firms used the basement and

[158] Ibid, 62.
[159] Ibid, 63.
[160] Ibid, 36-7.
[161] Ibid, 37.
[162] Ibid, 54-5 .

12,000 square feet first floor of The Factory for their offices, shops, and manufacturing from at least the 1960s[163] to the late 1970s. The most notable interior designer who had an office and workshop at The Factory was Phyllis Morris, who was known as "the designer to the stars" and one of the first women to find success in the Los Angeles design industry.[164] The area continues as a mecca for interior design.

West Hollywood's location in Los Angeles County also invited illegal gambling, drugs, and after hours alcohol service, which centered mainly around Sunset Boulevard. Though the Sunset Strip had always been a center of vice, the flashy nightclub scene of the 1940s and 1950s became the center of escalating violence between organized crime rackets.[165] A new era of entertainment on the Sunset Strip began when the Whiskey a Go-Go opened on January 15, 1964 in a former bank building. Elmer Valentine, an ex-cop from Chicago with mob ties, created what became "one of the most celebrated clubs in the history of rock music." The Sunset Strip quickly changed from sophisticated, expensive supper clubs to the place for youth culture. Music was a central focus and mode of expression for this culture. The Strip and nearby areas of West Hollywood became the center of West Coast rock music as it progressed from the 1960s through 1990s, spanning the eras of rock, folk, punk, glam, new wave, heavy metal, and grunge music.

Meanwhile on Santa Monica Boulevard, The Troubadour was opened by Doug Weston in 1957. Located three blocks away from The Factory, the club helped launch the careers of rock and folk singers such as Elton John, Linda Ronstadt, and Joan Baez. Another music venue/club would soon be at The Factory as it turned its use to entertainment. One of the first-known entertainment uses of The Factory was in 1967, when a group of celebrities, including Paul Newman Peter Lawford, and Samy Davis Jr. transformed the second floor to "The Factory," a venue favorited by the Rat Pack. This "cavernous private play-place" charged $1200 for its annual membership and had bars, dance floors, dining, and an art gallery.[166] After "The Factory" folded, a series of clubs opened on the second floor of The Factory. In 1973, Scott Forbes leased the second floor on Sunday nights and before long he took over the lease and created Studio One.

Beginning in the late 1950s, the LGBTQ community established itself as an integral part of West Hollywood's identity. One of the first-known businesses to cater to gay men was called Ah Men and was located at 8933 Santa Monica Boulevard. The history of Santa Monica Boulevard would soon become synonymous with gay culture and identity. By the 1960s, there were several gay and lesbian businesses; gay bars, although unadorned and shuttered clustered throughout the West Hollywood Area. An area which received the name "Boystown" was generally from La Peer Drive to La Cienega, but really stretched along to the middle of the city at Crescent Heights Boulevard and Santa Monica Boulevard. In West Hollywood, LGBTQ established a community of newcomers who gathered in local coffee shops, bookstores, restaurants, and nightclubs. In West Hollywood, they found a home, forming softball leagues, choral groups, and motorcycle

[163] Los Angeles Times, "Design Firm Leases Ground Floor of Club," J11.
[164] GPA Consulting, 58.
[165] Ibid, 60.
[166] Alleman, *Hollywood: The Movie Lover's Guide*, 259.

clubs.[167] Led by Scott Forbes of Studio One, several LGBTQ bars around greater Los Angeles joined together as the Los Angeles Tavern Guild and sponsored activities for the community throughout the area.[168] Over the course of the 1970s, gays and lesbians throughout Southern California recognized West Hollywood as "the most visible concentration of gay culture and power in the region." Many of the community organizations founded in Los Angeles began relocating or focusing their efforts on West Hollywood with its reputation as the center of the LGBTQ community.[169]

The appearance of bars and nightlife establishments evolved as the community felt more comfortable and safe. Initially, LGBTQ bars were located in older retail or industrial buildings. Owners removed all fenestration and installed rear entrances. Gradually, as persecution and shame diminished, windows were added to the facades. Retail space was available and rent was cheap. It was in the 1974, that Scott Forbes would give gay men something they never knew could exist – a nearly 6000 square foot, world-class disco catering only to gay men and run by a gay man.

By the mid-1980s, it was not uncommon for storefronts and bars in Boystown to start opening entirely on to the sidewalk. According to historian Moira Kenny, "West Hollywood marks the evolution of Los Angeles's gay movement from one focused on short-term responses to crisis within the community to one of creating and sustaining community institutions through alliances with other local constituent groups and residents."[170] The personal and sexual freedom of the community in the 1970s gave way to the crisis of the early 1980s as the AIDS pandemic swept through the gay community, giving new urgency to activism and LGBTQ-focused social services for the community.[171]

When the City of West Hollywood incorporated in 1984, it was the first city in the United States to have an elected governing body whose majority comprised openly gay officials. This landmark moment for LGBTQ rights and plurality was possible because of developments in the preceding decades.[172]A group called the Coalition for Economic Survival (CES) was a major force behind incorporation of West Hollywood, mobilizing and fighting for tenant's rights. While renter's rights were a major focus of the incorporation efforts, when West Hollywood officially incorporated as a city in 1984, "lesbian and gay issues defined early city politics." The first official act of the City Council was to pass an ordinance banning discrimination against lesbians and gays.[173]

[167] GPA Consulting, 77.
[168] Ibid, 79.
[169] Ibid, 77.
[170] Ibid, 78.
[171] Ibid, 76.
[172] Ibid, 76.
[173] Ibid, 83.

Background Context: LGBT History – 1940s - Stonewall Riots

Los Angeles played a critical role in the gay liberation movement in the United States. Before World War II, most LGBTs were isolated from one another but this soon changed during and after war when LGBTs from all over the country met each other through their service in the military and wartime industries.[174] Major port cities like San Francisco, Los Angeles, and New York, which served as meeting points before soldiers were sent off also had enclaves of gay and lesbian bars. For the first time many LGBTs could live out a different identity than they could in their hometown.[175] Los Angeles' reputation as a frontier town with more liberal social standards than the East Coast or Midwest also enticed many who were part of the LGBTQ community to move West.[176] Since the 19th century, California has been a beacon for LGBTs and "outlaws."

After the war, many LGBTs chose to stay in Los Angeles. It was easier to be "different" in Los Angeles, and even though homophobia still existed it paled in comparison to other cities and small towns in the U.S.[177] This then created a community that needed spaces. These spaces were formed "through communal responses to sites of resistance to homophobic repression." According to *Queers in Space: Communities, Public Spaces, Sites of Resistance*, a queer site "is a singular point of expression, exchange, sexuality, or resistance in the landscape that counters loss of use and habitation because of social changes and events rooted in homophobia."[178]

Before Studio One disco existed, the gay bars that existed in Los Angeles and across the nation were small, unadorned, had no windows, small windows, or windows covered with plywood, all with the intention to hide what was going on inside. Within the gay bar "it was possible for a homosexual to envision a future where in order to be free of sin, she or he did not need to become someone else….with very few exceptions, the bar was the only place where this process could happen."[179] Most of gay bars were also run by the mob, which kept the community repressed and under scrutiny. Although these spaces filled a vital need for many in the community, these spaces also perpetuated suppression and in-the-closet quietness and shame of the pre-1960s.

In the history of the Gay and Lesbian civil rights movement in the United States, the 1950's to the 1960's are considered the 'Homophile Years.' This is the time before the Stonewall Riots, with the growth in the urban subculture of gay men and lesbians, government and police harassment, persecution and investigation of gays. Through the 1950s to 1960s, the Homophile movement remained small and relatively marginalized. A very small percentage of LGBTs were deciding and forming what would become a gay revolution. Still thought of as "an abomination" and mentally ill in the eyes of the *Diagnostic and Statistical Manual* of the American Psychiatric Association, most LGBTs viewed themselves as flawed and kept their feelings of attraction

[174] GPA Consulting, "Survey L.A.," 22.
[175] *L.A., A Queer History*. Directed by Gregorio Davila.
[176] GPA Consulting, West Hollywood Commercial Survey, 62.
[177] GPA Consulting, "Survey LA," 22.
[178] Ingram et al., *Queers in Space*, 43.
[179] Ibid, 180.

inside. It is during this time that the small percentage who were willing to organize, protest, or to show themselves in some public way did so in the form of magazines like Edythe Eyde's *Vice Versa* and ONE Incorporated's *ONE magazine*.

Centered in Los Angeles, a preeminent event in the gay liberation movement was the founding of the Mattachine Society in 1950, which was one of the earliest homophile organizations in the country. Two years earlier, founding member Harry Hay, already a political activist, wrote a manifesto of an organization that would improve the social status of gay men. In their Statement of Missions and Purposes, the Mattachine Society adopted the following principles: homosexuals were a minority group with a unique heritage (equivalent to African-Americans, Latinos and Jews), and the group called for a grassroots movement of gay people to challenge anti-gay discrimination.[180]

The gay liberation movement gained steam by the mid-1960s due to political and social unrest brought on by the Vietnam War, the continued American Civil Rights Movement, the Feminist Movement, and the straight sexual revolution. During this time, sexual and gender norms hinted at being more fluid and the challenged the conservative ways of American government and social thoughts. These "norms" were now being challenged.[181]

While the straight community could partake and revel in the movements of the 1960s there were still many challenges waiting for the LGBT community. The Los Angeles Police Department (LAPD) for example. The LAPD, which operated in the City of Los Angeles, was notorious for raids and gay bashing, and general humiliation of gay folk – ranging from "hog-tying" to outright beatings and murders. At the time when Studio One opened, Ed Davis was the Chief of the LAPD. Under Davis, the LAPD and its vice squad were known for active policing against gays. Zealous officers were purported to have dangled youth over a cliff to try to make them reveal names of a pedophile ring.[182] Countless articles during Chief Davis' time with the LAPD were written with titles like – "The Power Politics of Ed Davis: A Cop Who Would Be King," "LAPD's 'Crazy Ed' Davis Shoots for California Governor," "In Cops' Eyes Gay Community Is a Threat," "The Meanest Police Chief."[183] Davis was the police chief from 1969 to 1978.

Almost ten years after the first-known instance of transgender persons resisting arbitrary police arrest at Cooper's Doughnut's in 1958, there were the 1967 Black Cat riots in Silver Lake. [184] LGBTs became more visible and identified themselves as a minority group which was now empowered by a more public and political stage.[185] In 1966 there was the first gay car parade of record on Hollywood Boulevard to protest the ban on homosexuals in the military. It was the first of five around the county.[186]

[180] GPA Consulting, 23.
[181] Ibid, 22.
[182] Thorstad, "Court Sends Boy Lover to Prison," 1.
[183] Various Los Angeles Times articles.
[184] GPA Consulting, 28-29.
[185] Ibid, 22.
[186] Ibid, 18.

The shift to "direct action tactics" of public protest, the gay liberation movement soon received occasional media visibility. Starting from Southern California, an organizational impulse spread, and consequently on the eve of Stonewall, fifty gay and lesbian organizations existed. As a result of the work and activism done in the homophile years, "the idea that gays and lesbians were a mistreated, persecuted minority had begun to infiltrate American society and the gay subculture."[187]

Background Context: LGBT History – Stonewall Riots – Studio One

The Stonewall Riots, which started as a result of a police raid on June 28, 1969, is widely considered as being the single most important event leading to the gay liberation movement. The Stonewall Riots "has come to assume mythic proportions among gay men and lesbians."[188] The news of the riots was heard across the United States. It became the marker between the conservative homophile movement and the radicalization of the gay liberation movement. One Mattachine member reviled the riots, calling the protesters "tacky and cheap" and "went against everything that I wanted people to think about homosexuals."[189] The sense of empowerment though that came from gays' "days of rage" at the Stonewall remade New York's gay nightlife. Gay life in the city just "seemed to explode."[190]

As a result of Stonewall, the 1970s can be considered the birth of a gay rights movement, from liberation to activism. Rather than try to destroy the old in order to build something new, gays and lesbians sought recognition and inclusion in American society; gays and lesbians expected and demanded acceptance for who they were.[191] Gays and lesbians took on a language of pride and self-affirmation and rejected the mainstream cultural views of homosexuality. Gay-focused, single-issue organizations publicly formed, and there were new economic opportunities for gay-orientated businesses, such as bars, bathhouses, discos and restaurants.[192]

The GLF (Gay Liberation Front) was born out of Stonewall. This "new breed of radicals" continuously participated in an almost continuous round of flashy, dramatic public demonstrations. Their targets were directed at all implicated in "the maintenance of gay oppression" – the media, the police, and the medical profession. They protested in the streets, but also spoke to high school civics classes. They "fashioned a new language and style of homosexuality. The accent was on pride and affirmation; they were blatant, outrageous, and flamboyant. Discarding notions of sickness and sin, they represented homosexuality as a revolutionary path toward freedom, as a step out of the constricted, stultifying gender roles of middleclass America. They engaged in public displays of affection, violated gender conventions, and gloried in the discomfort they deliberately provoked in others."[193]

[187] D'Emilio, *Making Trouble*, 238.
[188] Ibid, 239.
[189] Echols, *Hot Stuff*, Loc 1038-39.
[190] Ibid, Loc 1094.
[191] D'Emilio, 247.
[192] Ibid, 250.
[193] Ibid, 243.

In 1970, the GLF took on the "no touching" rule at gay bars in West Hollywood. The GLF focused on The Farm, a very popular gay bar owned by Eddie Nash who reportedly had mob ties. After a meeting and eventual threat from Nash, a GLF member reportedly said "You don't know who you're dealing with. We will bomb your bars." (At the time, the idea of bombing a place likely stemmed from the African-American church bombings of the 1950s and 1960s. Firebombing would soon hit the gay community with the firebombings of the MCC and the UpStairs Lounge.) After month-long protests, Nash met with Morris Kight, and The Farm was soon a "liberated bar."[194]

This new gay liberation quickly exploded with movement organizations. Post-Stonewall, there was an impulse to join and push together as one group. By 1973, there were close to a 1,000 gay and lesbian organizations; the results were the essential building blocks of both a movement and a community. In the early 1970s, Los Angeles would see the formation of the Gay Community Services Center (GCSC) formed to provide shelter for homeless gays and lesbians; the GCSC soon offered a gay men's STD clinic, which also offered individual and group counseling. The GCSC grew to be the largest LGBT organization in the country. (Scott Forbes was a board member.) The GCSC changed its name to the Gay and Lesbian Community Services Center in 1980.[195] The Gay Women's Services Center (GWSC) was formed and was the first organization in the U.S. incorporated as a social service agency exclusively for lesbians. The GWSC bailed lesbians out of jail, rescued lesbians from mental institutions, provided shelter for these women until they could "get back on their feet," and held social gatherings every evening of the week.[196]

Soon after Stonewall, the GLF sponsored weekend dances for gays and lesbians at liberal universities. The dances were meant to engender love and acceptance and to create community, which they tried to achieve through hippie-like circle dances but quickly GLF dances featured a disco ball and gogo-boys.[197] Much like they would soon do at Studio One, gay men would tear off their t-shirts, wave them above their heads, and dance bare-chested. Soon the Gay Activist Alliance (GAA), a more moderate group, began sponsoring Saturday night dances in 1971. By the very early 1970s, gay disco was already taking shape in Manhattan, New York. The GAA leased a SoHo firehouse as their gay and lesbian center, and used the space as a huge disco, bringing in 1,500 people. (See Figure 10) "Bathhouses and discos, rather than meeting halls or community centers, became what journalist Andrew Kopkind called the 'sensational glue' holding these communities together."[198]

For gay men accustomed to being surveilled and harassed on the dance floor and arrested during bar raids, the uninterrupted dancing with other men evoked the feeling "that there is only now, in this place and time."[199] Within the pulsing lights, engulfing sound, there was the "commingling

[194] Faderman and Timmons, 175-6.
[195] GPA Consulting, 27.
[196] Faderman and Timmons, 170
[197] Echols, Loc 1059.
[198] Ibid, Loc 1067.
[199] Ibid, Loc 1118.

of music, men, and the feeling of brotherhood."[200] The disco dance floor became the site of release and the coming disco years constituted a "sloughing off of centuries of shame and a venting of pent-up desire."[201]

The "pre-Stonewall pattern of control by the criminal underworld" was replaced in the early 1970s by gay men entrepreneurs opening businesses catering to gay men – bars, bathhouses, sex clubs, restaurants, and discos.[202] Most of these entrepreneurs were not considered activists nor did they belong to any gay liberation movement organizations, instead "they were the beneficiaries of what the movement had already wrought. The message of gay pride wafted through the air; it altered the way they lived and the way they understood their lives and identity."[203]

Background Context: Mitchell Camera Corp. and the New Demands of the Movie Industry

The Mitchell Camera Corporation factory (The Factory) is eligible for the National Register of Historic Places under Criteria A at the local level, in the areas of Art, Invention and Industry. The Mitchell Camera Corporation is exceptionally significant in Industry for creating and manufacturing the motion picture cameras that improved and advanced the practice and art of movie making. The Factory is a significant remnant of an era when the motion picture industry was booming in West Hollywood and Hollywood, California in the 1920s-1940s, generating a need for a large factory to design and manufacture technologically-advanced motion picture cameras and related equipment for the studios.[204] Mitchell Camera Corporation occupied The Factory building from 1929-1946.

Due to the development of motion pictures with sound/talkies in the late 1920s, the demand for quiet-running cameras was in high demand by the studios and theatergoers alike. The Mitchell Camera Corporation designed and manufactured the, almost, silent-running NC (News Camera) and the silent-running BNC (Blimped News Camera) at the Mitchell Camera Corporation factory building in West Hollywood, CA. By 1946, 85% of all motion pictures shown in theaters worldwide were filmed with Mitchell cameras that were made at the Mitchell Camera Corporation factory building.[205]

George A. Mitchell began his career in Los Angeles in 1911 as an optics expert and mechanic; he was trained in the U.S. Army Signal Corp and later in Universal Studios' camera maintenance shop. At Universal Studios, he became acquainted with many cameramen in the industry whose technical problems he resolved and he also created custom camera accessories according to their

[200] Ibid, Loc 1216.
[201] Ibid, Loc 1497.
[202] D'Emilio, 250.
[203] Ibid, 251.
[204] Roberts, "The Mitchell Camera: The Machine and Its Makers," 141.
[205] Mitchell Camera Corp, "Mitchell 16mm Professional," 16.

needs. This allowed Mitchell intimate exposure to the inner workings of the motion picture camera and the concerns of the cameraman.[206]

In 1919, Mitchell, the "master mechanic," and Henry Boeger were both working in a camera repair and modification shop in Hollywood called the National Motion Picture Repair Company. Mitchell and Boeger's first jobs at National were repairing and adapting the most utilized cameras in Hollywood at the time, the Bell & Howell, the Pathe, and the Debrie Parvo for studios and independent cameramen. Mitchell and Boeger took ownership of the company, which they renamed the Mitchell Camera Corporation.[207] [208]

Mitchell and Boeger as chief machinist and general superintendent headed the new Mitchell Camera Corporation. They set about building a new camera that would incorporate some of the basic concepts of the then popular Bell & Howell Standard, but improved with, inventor and cameraman, John E. Leonard's new adjustable curtain or rack over device, film moving mechanism or motion, and adjustable iris or variable shutter. These features became the hallmark of early Mitchell cameras. In 1919, Mitchell Camera Corp purchased Leonard's patents. In 1921 Mitchell Camera Corp created and marketed the Mitchell Standard camera.[209]

The first film shot with the Mitchell Standard was Mary Pickford's *The Love Light* (1921). The result was better than anticipated and soon Hollywood master cinematographers such as Charles Rosher (Mary Pickford films, *Sunrise*), Arthur C. Miller (*The Perils of Pauline, How Green Is Your Valley*), and Tony Gaudio (*Hell's Angels, Little Caesar*) purchased their own Mitchell Standards.[210]

International Photographer magazine conducted a test on the Mitchell Standard - "As a test for endurance [Mitchell] put a camera on a milling machine, running it at 24 pictures a second continuously for five weeks, equivalent of two to three years use. During the run the camera was well taken of and oiled once or twice a day. At the end of five weeks we compared measurements (made after the test) with those made at the beginning and were unable to detect any wear."[211]

By 1923, Mitchell Camera Corp had sales representatives in Los Angeles, New York and San Francisco. A backlog of orders for the Mitchell Standard forced Mitchell manufacturing into a 72-hour work week. At this time there were thirty Mitchell Standards in use in the Hollywood studios, making Mitchell Camera Corp and Bell & Howell the standard cameras used in studios through the late silent film period. Mitchell Camera Corp announced that their current

[206] Raimondo-Souto, *Motion Picture Photography*, 55.
[207] Ibid, 55.
[208] Hoke, "Mitchell Camera Nears Majority," 495.
[209] Leonard, Various Patents, 1921.
[210] Raimondo-Souto, 55.
[211] Jonson, "Effect Maintenance in Quieting Cameras," 166.

manufacturing building had become too small and could not accommodate the company's growth so they would be constructing a larger facility in the near future.[212]

Theatre attendance was in a steady growth pattern since 1921. In the mid-1900s, there were about 5,000 theatres in the US; at the beginning of 1930 there were 22,624, representing an average growth of about 740 theatres per year. By the mid-1920s, a decision by Warner Brothers and Fox to introduce synchronized sound and amplification systems in their theaters forced all the major studios to confront the need for new sound and motion picture technology.[213]

The first sound equipment was installed in theaters in late 1926. The overwhelming success of *The Jazz Singer* ushered in a phenomenal rise in audience attendance. The wiring of theaters for sound motion pictures progressed rapidly and by 1929, there were approximately 9,000 theaters out of 26,000 wired for sound in the United States. There were approximately 2,000 theatres wired for sound in Europe.[214]

By August 1930, the attendance to theatres was 115 million admissions every week; this number meant that the entire population of the United States attended the motion picture theater every seven days. It was no longer considered a luxury, but a necessary form of recreation for the masses.

According to International Photographer, by 1930 the total investment in the motion picture industry was $2.5 billion in the US alone; in Europe it was estimated at $1 billion. And it was estimated that 75% of theatres in the United States would soon be wired for sound motion pictures/talkies.[215]

However, even with these rising numbers in revenue and attendance, there was still a cloud of doubt over the future of sound motion pictures/talkies. International Photographer opined that the current sound films were just "a combination of unsatisfactory photography with unsatisfactory sound effects, which even the best story cannot efface." And by December 1930 it was known that out of the approximately 26,000 theaters in the US, 10,000 were forced to close because they were not wired for sound and consequently could not compete with theaters that were wired for sound.[216]

Movie producers turned to motion picture equipment manufacturers and their professional associations to an unprecedented degree. To solve the small-scale problems of sound, studios relied more heavily on their in-house engineers, draftsmen, and machinists. But the race for quality sound motion pictures put even greater demand on outside companies and caused a great expansion of the technical manufacturing and service sector.[217]

[212] American Cinematographer, "Mitchell Increases Production Program," 22.
[213] Raimondo-Souto, 298.
[214] Irby, "Recent and Future Economic Changes in the Motion Picture Field," 34-35.
[215] Ibid.
[216] Criticus, "Industry Must Look Truth in Face," 18.
[217] Bordwell and Staiger, 299.

Santa Monica Boulevard as it runs through the westside of Hollywood and the City of West Hollywood was one of the main arteries of technical service and manufacturing companies – on the westside of Hollywood, Kodak established the Eastman Service Building in 1929 and added a processing plant in 1930 (currently slated for demolition); DuPont built a laboratory and manufacturing plant in West Hollywood in 1929; Mole-Richardson lighting manufacturing company moved to a new location one block south of West Hollywood in 1928 and built an addition a year later (demolished); Fearless Camera had a showroom and offices in West Hollywood in 1932 (demolished). And in 1929, Mitchell Camera Corp built a new factory in West Hollywood which was double the size of their previous location in Hollywood.[218] It is one of the last remaining factory buildings originally associated with the technological innovation and manufacturing side of the Hollywood movie making industry and with the light industrial origins of modern West Hollywood.

Before the days of talking pictures, no one gave a thought to the loud noise of the camera. According to International Photographer, "when the sound man first came into the picture business, he almost created a panic with his demands to do this and you can't do that….No one expected to hear the producer say: 'Never mind the picture; we want the sound.'" No one expected the time when the cinematographer would be in sound booths behind glass, be forced to limit or discard his lighting equipment (because they would buzz), or work with a camera blimp to dampen the noise which made focusing and general movement of the camera cumbersome.[219]

At an American Society of Cinematographers meeting in 1929, the cinematographers and sound engineers in attendance were asked, what would you consider an ideal condition for achieving perfect photography/for making a perfect voice record? The cinematographers answered "an ideal photographic condition exists when we can place our lights and cameras at any desired point, or work without any restrictions whatever." The sound engineers answered, "an ideal location for making a perfect vocal record would be in the middle of the Mojave desert, unhampered by cameras, walls or any other disturbing elements."[220]

The major camera manufacturers, including Bell & Howell, Mitchell Camera Corp and Fearless Camera took on the task of creating a silent-running camera. Bell & Howell was quick to come up with "silent" cameras. Bell & Howell announced their Standard Sound Camera, which had to stay at least ten feet away from any microphone; Fearless came out with the New Fearless Silent Camera in 1930, which also had to remain at least ten feet away from any microphone. Both of these cameras still required a blimp (a large suitcase-like device that fit over the camera) in order for the camera to be close to the actors and action.

[218] Davis, "Film Equipment Production Centered Here," D1, D3.
[219] Clark, "Before and After Sound," 34, 36.
[220] American Cinematographer, "Sound Men and Cinematographers Discuss Their Mutual Problems," 8, 39.

Conclusion

The Mitchell Camera factory/Studio One Disco and Backlot building (The Factory) is eligible for the National Register of Historic Places under Criterion A at the local level of significance due to its pivotal association with the motion picture industry and LGBTQ civil rights and events that have made a significant contribution to the broad patterns of the City of West Hollywood's political and social history.

In 1978, The Factory building was recognized by the West Hollywood Chamber of Commerce for its historic significance as the former Mitchell Camera Company factory, and for the historically significant building's contribution to the WHCC's plan to attract business to West Hollywood. Until 1984, West Hollywood was an unincorporated city; the WHCC was acting as the city's only local government when they held a celebrity hosted ceremony and placed a plaque in the sidewalk cement in front of The Factory building on Robertson Blvd honoring the building.[221]

The City of West Hollywood has done two residential Historic Resources Surveys, in 1986-87 and 2008. Although both surveys concentrated on residential properties, both cited a few commercial structures the surveyors thought were of architectural note. The Factory building was cited on both surveys.[222] [223]

In 1987, the City of West Hollywood completed a historic evaluation for The Factory building. The historic research consultants Johnson Heumann Research Associates found the building to be eligible for local listing and for listing on the National Register.[224]

In 1994/95, the City of West Hollywood's Department of Community Development filed an application for the nomination of the building at local level. The City's Cultural Heritage Advisory Board recommended that The Factory building not be designated as a Cultural Resource, and the City Council agreed. Although the resolution noted the building's exterior is largely intact, the City Council cited some dented exterior sidewall panels and interior alterations as reasons for denying the designation. The resolution also noted that the "design of the building is undistinguished and makes no contribution to the historical events that occurred at the property." However, at the time the resolution was written, the architect, builder and that the building was specifically designed and built for the Mitchell Camera Corporation was "unknown." The owner of the building opposed the designation.[225]

In 2015, The Factory building was chosen as one of the National Trust For Historic Preservation's 11 Most Endangered Historic Places 2015.[226]

[221] Los Angeles Times, "Ceremony Set For Landmark Designation in W. Hollywood," H22.
[222] Johnson Heumann Research Associates (HRG), "City of West Hollywood: Historic Resources Survey 1986 – 1987," 54, 87.
[223] ARG, "City of West Hollywood: R2, R3, R4 Multi-Family Survey Report," February 2008, 20.
[224] City of West Hollywood and Johnson Heumann Research Associates, "DPR: Historic Resources Inventory: Studio One, Mitchell Camera Manufacturing Company," 1987.
[225] City of West Hollywood, "Resolution No. 95-1393," January 17, 1995
[226] National Trust for Historic Preservation, "11 Most Endangered Historic Places: The Factory." Accessed June 2015. www.savingplaces.org/places/the-factory#.V0No0SMrJuU.

In 2016, GPA Consulting was hired by the City of West Hollywood to conduct a survey of commercial resources. That survey has not been adopted. The Factory currently has an evaluation of 3CS; Appears eligible for the California Register through survey evaluation. An earlier draft of the survey indicated the property was eligible for National Register listing through survey evaluation.[227]

[227] GPA Consulting, West Hollywood Commercial Survey, DPR.

9. Major Bibliographical References

Bibliography (Cite the books, articles, and other sources used in preparing this form.)

Mitchell Camera Corporation –

Academy of Motion Picture Arts and Sciences, "The 25th Academy Awards Memorable Moments." Accessed August 15, 2016. https://www.oscars.org/oscars/ceremonies/1953/memorable-moments.

American Cinematographer, "Cameramen Want Silence," *American Cinematographer* (May 1931): 22.

American Cinematographer, "Mitchell Increases Production Program; To Build New Plant," *American Cinematographer* (June 1923): 22.

American Cinematographer, "Photography of the Month," *American Cinematographer* (May 1941): 222-23.

American Cinematographer, "Sound Men and Cinematographers Discuss their Mutual Problems," *American Cinematographer* (August 1929): 8, 39.

American Cinematographer, "Taking the Click Out of Cameras," *American Cinematographer* (May 1929): 18.

American Cinematographer, "The Mitchell's New Home," *American Cinematographer* (February 1929): 34.

American Cinematographer, "Through the Editor's Finder," *American Cinematographer* (May 1941): 221.

Bordwell, David, Janet Staiger, and Kristin Thompson. *The Classical Hollywood Cinema, Film Style & Mode of Production to 1960*. New York: Columbia University Press, 1985. Print.

Bradbury Science Museum. "This Is One of Four Original 35mm Cameras That Were Used to Film the Trinity Test Back on July 16, 1945. These Were Traditional Movie Cameras in #Hollywood Back in the 1940s." *Instagram, Bradbury Science Museum*. June 12, 2015. Accessed March 2, 2016. https://www.instagram.com/p/3eyRiJLlKU/.

Burdick, Harry, "Intensive Preparation Underlies Toland's Achievements," *American Cinematographer* (June 1935): 240, 247-48.

Carringer, Robert L., *The Making of Citizen Kane*. Berkeley: University of California Press, 1985. Print.

City of West Hollywood and Johnson Heumann Research Associates, "DPR: Historic Resources Inventory: Studio One, Mitchell Camera Manufacturing Company," *City of West Hollywood Historic Resources Survey* (1987).

Clark, Daniel B., "Before and After Sound," *The International Photographer* (June 1930): 34, 36.

Criticus, "Industry Must Look Truth in Face," *The International Photographer* (December 1930): 18.

Davis, James L., "Film Equipment Production Centered Here," *Los Angeles Times* (August 24, 1930): D1, D3.

The Editor, "A Cinema World Wonder (The Technicolor Camera Department)," *The International Photographer* (June 1930): 84-87.

Enticknap, Leo, *Moving Image Technology: From Zoetrope to Digital*. London: Wallflower Press (Columbia University Press), 2005.

George Worral interview, Johnson Heumann Research Associates, City of West Hollywood Building and Safety Records, 1987.

Hoke, Ira B., "Mitchell Camera Nears Majority," *American Cinematographer* (December 1938): 495-96, 522-23.

Hoke, Ira B., "Mitchell Silences Sound Camera," *The International Photo grapher* (September 1931): 11-12.

IEC. "Classic Motion Picture Cameras." *IEC: Internet Encyclopedia of Cinematographers*. N.d. Accessed June 5, 2015. http://www.cinematographers.nl/CAMERAS1.html.

The International Photographer, "A Tribute to the Engineer," *The International Photographer* (May 1930): 27,48.

The International Photographer, "After a World's Market," *The International Photographer* (May 1934): 3.

The International Photographer, "Cinematographer," *The International Photographer* (February 1938): 9.

The International Photographer, "New Mitchell Factory," *The International Photographer* (February 1929): 4.

Internet Movie Database. Various titles, production companies, directors, cinematographers, and actors. http://www.imdb.com.

Irby, Dr. Franklin S., "Recent and Future Economic Changes in the Motion Picture Field," *The International Photographer* (May 1930): 34-35.

Joe Dunton (Owner of Mitchell Camera Corp) interview, Kate Eggert, January 31, 2015.

Jonson, G.W., "Effect Maintenance in Quieting Cameras," *The International Photographer* (June 1930): 166.

Leonard, J.E., Patent 1390246: Adjustable Curtain for Camera, 1921; Patent 1392876: Adjustable Iris for Curtain, 1921; Patent 1390247: Film Moving Mechanism for Motion Picture Cameras, 1921.

LIFE Magazine, "Movie Making: It is a Complex Business of Machines and Technicians," *LIFE Magazine* (January 8, 1945): 68-77.

LIFE Magazine, "Movie of the Week: Citizen Kane, In His First Film Orson Welles Breaks all Hollywood's Taboos," *LIFE Magazine* (March 17, 1941): 53-56.

LIFE Magazine, "Orson Welles: Once a Child Prodigy, He Has Never Quite Grown Up," *LIFE Magazine* (May 26, 1941): 108-116.

Los Alamos National Laboratory, "Dateline Los Alamos, Special Issue 1995," Accessed July 2015. https://library.lanl.gov/cgi-bin/getfile?history.htm.

Los Angeles Times, "Ceremony Set For Landmark Designation in W. Hollywood," *Los Angeles Times* (November 30, 1978): H22.

Los Angeles Times, "Industry Hits Hollywood," *Los Angeles Times* (December 30, 1928): E6.

Manhattan Project Voices, Berlyn Brixner's Interview, February 22, 1992, http://manhattanprojectvoices.org/oralhistories/berlynbrixnersinterview.

Mitchell, G.A., U.S. Patent 1,850,411: Film Movement. Filed April 25, 1930. Published March 22, 1932.

Mitchell, G.A., U.S. Patent 1,930,723 A: Film Movement Mechanism. Filed January 11, 1932. Published October 17, 1933.

Mitchell, G.A., U.S. Patent 2,088,714: Sound Insulated Motion Picture Camera. Filed May 7, 1934. Published August 3, 1937.

Mitchell Camera Corporation Ad, "Announcing the New Mitchell Silenced Camera," *American Cinematographer* (July 1931): back cover.

Mitchell Camera Corporation Ad, "Mitchell Camera Corporation," *American Cinematographer* (August 1929): back cover.

Mitchell Camera Corporation Ad, "Mitchell Wide Film Cameras," *International* Photographer (August 1930): back cover.

Mitchell Camera Corporation Ad, "Satisfied Mitchell Camera Users: Arthur Edeson, A.S.C.," *American Cinematographer* (August 1941): back cover.

Mitchell Camera Corporation Ad, "Satisfied Mitchell Camera Users: Charles B. Lang, Jr., A.S.C.," *American Cinematographer* (September 1941): back cover.

Mitchell Camera Corporation Ad, "Satisfied Mitchell Camera Users: Ernest Haller, A.S.C.," *American Cinematographer* (May 1941): back cover.

Mitchell Camera Corporation Ad, "Satisfied Mitchell Camera Users: Gregg Toland, A.S.C.," *American Cinematographer* (February 1941): back cover.

Mitchell Camera Corporation Ad, "Satisfied Mitchell Camera Users: Sol Polito, A.S.C.," *American Cinematographer* (June 1941): back cover.

Mitchell Camera Corporation Ad, "The Expert Cameraman," *The International Photographer* (September 1937): 15.

Mitchell Camera Corporation Ads, various in American Cinematographer and The International Photographer, 1929-1946.

Mitchell Camera Corporation, *Mitchell Motion Picture Cameras.* West Hollywood, CA: Mitchell Camera Corporation, 1934.

Mitchell Camera Corporation, *Mitchell 16mm Professional.* Glendale, CA: Mitchell Camera Corporation, 1946.

Polito, Sol, "The BNC Mitchell Silent Camera," *The International Photographer* (May 1939): 6-9.

Raimondo-Souto, H. Mario., *Motion Picture Photography, A History, 1891 – 1960*. North Carolina: McFarland & Company, Inc. Publishers, 2007. Print.

Reeves, Arthur, "Modern Camera Factory," *The International Photographer* (April 1929): 4.

Roberts, Laurence J., "The Mitchell Camera: The Machine and Its Makers," *SMPTE Journal* (February 1982): 141-152.

SCOCAL, "Mitchell Camera Corp. v. Fox Film Corp.," 8 Cal.2d 192. Accessed March 9, 2015. http://scocal.stanford.edu/opinion/mitchellcameracorpvfoxfilmcorp24998.

Staub, Ralph B., "With the Pioneers," *The International Photographer* (July 1929): 28.

Stull, William, "'Hollywood's Own' Film Unit Volunteers to Film the Navy," *American Cinematographer* (October 1941): 166-67, 494-95.

Stull, William, "Mitchell Blimpless Cameras Really Silent," *American Cinematographer* (April 1940): 166-67.

Stull, William, "The Silent Mitchell Camera," *American Cinematographer* (July 1931): 8-9, 22.

Theisen, Earl, "Evolution of the Motion Camera," *The International Photographer* (June 1933): 6-9,42.

Toland, Gregg, "Intensive Preparation Underlies Toland's Achievements," *American Cinematographer* (June 1935): 240, 247.

Toland, Gregg, "Realism for 'Citizen Kane,'" *American Cinematographer* (February 1941): 54-55, 80.

Yulin, Harris, "Harris Yulin: All I Had to Carry Me Through Was a Mustache," *LIFE Magazine* (November 7, 1969): 72.

Wilhelm, Theodore. "Role of the Mitchell Filming the Atomic Bomb." *mitchellcamera.com.* May 15, 2013. Accessed March 12, 2015. http://mitchellcamera.com/forum/viewtopic.php?t=45.

Studio One –

The Advocate, "Los Angeles," *The Advocate* (July 28, 1976): 2 pages.

The Advocate, "N.A.," *The Advocate* (July 28, 1976): 1 page.

AIDS Project Los Angeles (APLA), "History," *APLA*. Accessed December 2015. http://www.apla.org/about-apla/history.html.

Ainsworth, Ed, "Renaissance Art Aids Boys School: Manufacture of Christmas Wreaths Modeled After Della Robbia Works Keeps Youth Busy," *Los Angeles Times* (August 31, 1951): A1.

Alleman, Richard, *Hollywood: The Movie Lover's Guide: the Ultimate Insider Tour of Movie L.A.* New York: Random House, 2005.

Faderman, Lillian, and Stuart Timmons. *Gay L.A., A History of Sexual Outlaws, Power Politics, and Lipstick Lesbians*. Berkeley: University of California Press, 2009. Print.

AmfAR. "Statistics: United States." *AmfAR*. July 2014. Accessed October 2015. http://www.amfar.org/About-HIV-and-AIDS/Facts-and-Stats/Statistics--United-States/.

Anders, Corrie M., "Marriott's Park to Host Party For 25,000 Gays," *San Francisco Examiner* (April 21, 1979): 1, 4. Studio One and Gay Night articles, ephemera, and photos, Carol Taylor-DiPietro Collection.

Attias, Ben. "'Police Free Gay Slaves': Some Juridico-Legal Consequences of the Discursive Distinctions Between the Sexualities." 1995. *California State University, Northridge*. Accessed November 2015. http://www.csun.edu/~hfspc002/PoliceFreeGaySlaves.html.

Avert, "History of HIV and AIDS Overview | AVERT," *AVERT*. Accessed November, 2015. http://www.avert.org/history-hiv-aids-usa.htm#footnote6_emnr64o.

Aybar, Andres, "Los Angeles," *The Advocate* (October 5, 1975): n.p.

Baird, Barbara, " It's Exciting…Sexy in Disco Whirled," *Los Angeles Times* (August 26, 1979): CS1, CS4.

Bars and Coffee Shops, June Mazer Subject File, June Mazer Lesbian Archives, West Hollywood, California.

Billboard, "L.A. Club Change," *Billboard* (July 14, 1979):76.

Billboard, "N.A.," *Billboard* (July 24, 1982): 30. (Article about Stephanie Mills.)

Billboard, "So. Calif. DJs Proclaim Casablanca Label of Year," *Billboard* (July 14, 1979): 1 page.

Billboard, "Soul Sauce," *Billboard* (March 24, 1979): 69.

Braun, Stephen, "Cityhood Foes Make First Move," *Los Angeles Times* (September 27, 1984): A1, A14, A19.

Braun, Stephen, "Politics in West Hollywood Got Off to Expensive Start," *Los Angeles Times* (February 21, 1985): WS1, WS9.

Braun, Stephen, "Rent Control, Gay Rights Lead New City's Agenda," *Los Angeles Times* (November 8, 1984): E1, E5.

Braun, Stephen, "West Hollywood: A Community of Separate Worlds," *Los Angeles Times* (June 11, 1984): E1, E5.

Brewster, Bill, and Frank Broughton. *Last Night a DJ Saved My Life: The History of the Disc Jockey*. New York: Grove Press, 2006.

California Center for Research and Education in Government, "California Journal: AB 489-CA-Consenting Adults Act," Volume 6, 1975.

Campbell, Andy. "An Emancipation – Or – How the L.A.P.D. Freed the Slaves." *Bound Together Andy's Research Blog* (blog), December 27, 2008. Accessed August 2016. https://boundtogether.wordpress.com/2008/12/27/an-emancipation-or-how-the-lapd-freed-the-slaves/.

Carol Taylor-DiPietro, interview by Kate Eggert, October 3, 2015.

Cartier, Marie. *Baby, You Are My Religion, Women, Gay Bars, and Theology Before Stonewall*. New York: Routledge, 2013. Print.

Cartnal, Alan, "Life After Dark," *New West* (August 15, 1977): 20-26.

Christopher Street West, "LA Pride History," *Christopher Street West*. Accessed November 2015. http://www.lapride.org/history.php.

Citron, Alan, "AIDS Haunts Gay Sex Life," *Los Angeles Times* (July 17, 1983): WS1, WS6.

Citron, Alan, "Gay Leaders Expect Big Turnout for Washington March," *Los Angeles Times* (October 4, 1987): SB8.

City of West Hollywood. "City Council Minutes." February 4, 2002. Accessed August 2016. http://www.weho.org/Home/ShowDocument?id=8678.

City of West Hollywood. "City Employees Raise $42,000 for AIDS Project Los Angeles." *City of West Hollywood*. January 19, 2014. Accessed October 2015. http://weho.org/Home/Components/News/News/2464/23.

City of West Hollywood. "City of West Hollywood Reflects on 30 Years of Cityhood." *City of West Hollywood*. November 29, 2014. Accessed October 2015. http://www.weho.org/Home/Components/News/News/2890/.

Clendinen, Dudley, and Adam Nagourney. *Out For Good, The Struggle to Build a Gay Rights Movement in America*. New York: Simon & Schuster, 2001.

Collins, Nancy. "Elizabeth Taylor's AIDS Crusade." *Vanity Fair*. November 1992. Accessed October 2015. http://www.vanityfair.com/news/1992/11/elizabeth-taylor-activism-aids.

Conlon, Daniel, "Celebashes Disneyland," *The Advocate* (July 19, 1979): 34, 36.

Cuskelly, Richard, "First Time For Gays at Disneyland, Landmark Event For Homosexuals," *Los Angeles Herald-Examiner* (May 27, 1978): 1 page. Studio One and Gay Night articles, ephemera, and photos, Carol Taylor-DiPietro Collection.

D'Emilio, John. *Making Trouble: Essays on Gay History, Politics, and the University*. Taylor and Francis, 2014.

Data-Boy, "Hundreds Line Up For Studio One Opening," *Data-Boy* (June 1977): 36-38.

Doyle, JD, "Lesbian Tide: July 1971-June 1980." *Houston LGBT History*. Accessed April 21, 2016. http://www.houstonlgbthistory.org/lesbian-tide.html.

Echols, Alice. *Hot Stuff: Disco and the Remaking of American Culture*. W. W. Norton & Company, 2010. Kindle edition.

Ellingwood, Ken, "The 'Gay Camelot' Grows Up 10 Years After West Hollywood Became a City," *Los Angeles Times* (June 27, 1994): A1.

Faber, Charles, "Free Press Entertainment," *Los Angeles Free Press* (November 4-10, 1977): 9.

Faderman, Lillian, and Stuart Timmons. *Gay L.A., A History of Sexual Outlaws, Power Politics, and Lipstick Lesbians*. Berkeley: University of California Press, 2009. Print.

Faris, Gerald, "'Factory,' Once Private Show Biz Club, Doing a New Thing Now," *Los Angeles Times* (October 3, 1971): WS1.

Finkel, Madelon Lubin. *Truth Lies, and Public Health: How We Are Affected When Science and Politics* Collide. Westport, Connecticut: Greenwood Publishing Group, 2007.

Forbes, "Discomania," *Forbes Magazine*. (June 1, 1976): 47-49.

Fox, David, "Hollywood Powers Help AIDS Victims," *Los Angeles Times* (August 11, 1985): W3.

Franklin, William, "Great American Fun on the Gay Midway," *The Advocate* (June 14, 1979): 3 pages. Studio One and Gay Night articles, ephemera, and photos, Carol Taylor-DiPietro Collection.

French, Barbara, "Great America Party for Gays Stirs Up a Fuss," *San Jose Mercury* (January 21, 1979): 1B, 4B.

Frontiers Media, "Boystown For Everybody." *Frontiers Media*. May 23, 2011. Accessed November 2015. https://www.frontiersmedia.com/channel-special-reports/2011/05/23/boystown-for-everybody/.

Gaines, Steven, *The Sky's the Limit: Passion and Property in Manhattan*. New York: Little, Brown and Company, 2005.

Galligan, David, "Cabaret! Stars Words," *The Advocate* (October 5, 1977): 18-20.

Galligan, David, "The Sweet Smell of Success at Studio One," *The Advocate* (July 28, 1976): 2 pages.

Garcia, Kenneth J., "AIDS Funds Given a Boost in High Style," *Los Angeles Times* (July 11, 1988): C2.

Gary Mortimer, interview by Kate Eggert, September 2, 2015.

The Gay Community Mobilization Committee. Flyers of Studio One boycott. Studio One, ONE Subject File collection, Coll2012-001, ONE National Gay & Lesbian Archives, Los Angeles, California.

George, Nelson, "Disco Forum: Art in Disk Programming Keenly Debated," *Billboard* (March 24, 1979): 43.

Gierach, Ryan, *Images of America: West Hollywood*. California: Arcadia Publishing, 2003. Print.

Gindick, Tia, "Club Troubleshooter: Doctoring the Discos," *Los Angeles Times* (December 4, 1978): F1, F6.

Gottlieb et al., "Pneumocystis Pneumonia – Los Angeles," *Morbidity and Mortality Weekly Report (MMWR), Centers for Disease Control and Prevention* (June 5, 1981). Volume 30, Number 21: 1-3. Web - http://www.cdc.gov/mmwr/preview/mmwrhtml/june_5.htm.

GPA Consulting, "Survey LA: LGBT Historic Context Statement," September 12, 2014.

GPA Consulting, Final "City of West Hollywood: Commercial Historic Resources Survey," September 2016.

Grant, Lee, "Hal & David: Gay Comics on the Crossover Route," *Los Angeles Times* (February 28, 1983): G1-2.

Grein, Paul, "Studio One Constantly Upgrading, L.A. Spot Remodels – Every Year," *Billboard* (September 29, 1979): 46-47.

Grein, Paul, "Why the Charts?" *Billboard* (March 24, 1979): 50.

Holston, Noel, "Expect No Pitch from Joan Rivers at AIDS Concert," *Star Tribune* (April 26, 1990): 1E.

Houdek, Richard, "At Studio One: Impersonating the Worst in Women," *Los Angeles Times* (March 24, 1977): H21.

Houdek, Richard, "Judy Kaye Makes Nightclub Debut," *Los Angeles Times* (October 5, 1979): 40.

Houdek, Richard, "Street Songs by Miss Fitzgerald," *Los Angeles Times* (March 10, 1977): F12.

Hunt, Dennis, "Bernadette Peters in Song, Dance," *Los Angeles Times* (April 22, 1977): F23.

Hunt, Dennis, "Disco Clubs: Down But Not Out," *Los Angeles Times* (April 8, 1980): G1, G4.

Hunt, Dennis, "Disco DJ: Producer of the Beat," *Los Angeles Times* (January 12, 1979): F14.

Hunt, Dennis, "Rock 'n' Roll, Discoteques Loving the Spin They're In," *Los Angeles Times* (June 1, 1975): T58, OC16A

Ingram, Gordon Brent, Anne-Marie Bouthillette, and Yolanda Retter editors, *Queers in Space: Communities, Public Places, Sites of Resistance*. Seattle, WA, 1997. Print.

In Touch Magazine, "People: Scott Forbes," *In Touch Magazine* (September 1978): 34-35.

Jacobs, Jody, "Cranking Up For Birthday Bash," *Los Angeles Times* (September 19, 1976): E3.

Jacobs, Jody, "Stars Step Out for 'Chorus Line,'" *Los Angeles Times* (July 9, 1976): F2-3.

Japenga, Ann, "Gays Trying to Deal With Fear of Cancer," *Los Angeles Times* (September 28, 1982): F1, F8.

Johnson, Dave, "Studio One Hit With Charges of Racism, Sexist Discrimination," *Los Angeles Free Press* (June 13-19, 1975): 2 pages.

Kepner, Jim, and Walter L. Williams, "West Hollywood Incorporation – 1924-1985, Subject Area: Community Organization," 4 pages.

Kilday, Gregg, "Bash Follows 'Tommy' Premiere," *Los Angeles Times* (March 21, 1975): 114.

Kilday, Gregg, "The Long Struggle to Make a Normal Heart," *Hollywood Reporter* (April 18, 2014): 32-37.

Kimmel, Joel, "Leonard Grant: Bringing Hollywood Back to Hollywood," *The Advocate* (October 5, 1977): 21.

L.A, A Queer History. Directed by Gregorio Davila. Hollywood, CA: Film Bliss Studios: 2015.

La Ganga, Maria L., "80,000 Turn Out For Gay Parade," *Los Angeles Times* (June 28, 1982): C1.

Lagos, Marisa. "Twin Peaks Tavern - Gay Bar, Historic Landmark." *SFGate*. January 19, 2013. Accessed September 2015. http://www.sfgate.com/politics/article/Twin-Peaks-Tavern-gay-bar-historic-landmark-4208442.php.

LaRiviere, Anne, "'Dynasty' May Be Gay Bars' Answer to 'Monday Night Football,'" *Los Angeles Times* (F

The Lesbian Tide (April 1972). Accessed April 21, 2016. http://www.houstonlgbthistory.org/Houston80s/Assorted%20Pubs/Lesbian%20Tide/lesbian%20tide-7204.compressed.pdf.

Life Stories Network, "1970's Gay Disco Seventies." May 17, 2015. Accessed August 2016. http://lifestoriesnetwork.com/index.php?option=com_k2&view=item&id=184:1970-gay-bars.

Licata, Sal J., "The Emerging Gay Presence," *The Advocate* (August 9, 1978): 3 pages.

Litton, Gene. Facebook. July 31, 2016. 3:31pm. Studio One Disco Nightclub - West Hollywood. https://www.facebook.com/groups/68745887988/.

Lloyd Coleman, interview by Kate Eggert, October 20, 2015, January 15, 2016.

Los Angeles Free Press, "Miscellaneous," *Los Angeles Free Press* (October 17-23, 1975): 25.

Los Angeles Free Press, "Studio One," *Los Angeles Free Press* (n.d.): 1 page.

Los Angeles Times, "Candidate for Benefit Ball Queen Chosen," *Los Angeles Times* (June 28, 1959): CS6.

Los Angeles Times, "Design Firm Leases Ground Floor of Club," *Los Angeles Times* (May 25, 1969): J11.

Los Angeles Times, "The Inside View," *Los Angeles* Times (June 1, 1979): G2.

Los Angeles Times, "Joan Rivers Sets AIDS Benefits," *Los Angeles Times* (March 7, 1984): I6.

Los Angeles Times, "McKuen to Play Benefit Sunday," *Los Angeles Times* (April 6, 1977): C11.

Love, Chris, "Remembering LGBT History: the New Orleans UpStairs Fire, the Largest Gay Massacre in U.S. History," *Daily Kos*. June, 24, 2013. Accessed August 18, 2015. http://www.dailykos.com/story/2013/6/24/1218532/-Remembering-LGBT-History-The-New-Orleans-UpStairs-Fire-the-Largest-Gay-Massacre-in-U-S-History.

Marinacci, Michael. "The Metropolitan Community Church." *Califia's Children*. February 9, 2015. Accessed September 2015. http://califias.blogspot.com/.

Mills, James F., "'Historic Boystown' Gets City Council Support." *West Hollywood Patch*. April 9, 2011. Accessed November 2015. http://patch.com/california/westhollywood/historic-boystown-gets-city-council-support.

N.A., "Gay Community Services Center," N.A. (1977): 1 page. Studio One and Gay Night articles, ephemera, and photos, Carol Taylor-DiPietro Collection.

N.A., "Gay Night at Disneyland!" N.A. (1977): 1 page of photographs by Pat Rocco. Studio One and Gay Night articles, ephemera, and photos, Carol Taylor-DiPietro Collection.

N.A., "That's Show Biz Dept.," N.A. 1 page. Studio One, ONE Subject File collection, Coll2012-001, ONE National Gay & Lesbian Archives, Los Angeles, California.

Neece, Randall, *Gone Today, Here Tomorrow: A Memoir*. Bloomington: AuthorHouse, 2012.

Nelson, Harry, "Epidemic Affecting Gays Now Found in Heterosexuals," *Los Angeles Times* (April 14, 1982): B22.

Nelson, Harry, "Mysterious Fever Now an Epidemic," *Los Angeles Times* (May 31, 1982): A1, A3, A20.

Nelson, Harry, "Outbreak of Pneumonia Among Gay Males Studied," *Los Angeles Times* (June 5, 1981): A3, A25.

Nelson, Harry, "Virus May Be Linked to Pneumonia in Gays," *Los Angeles Times* (December 10, 1981): B3, B19.

Proquest at Los Angeles Public Library, various articles reviewing performers at the Backlot Theatre, *Los Angeles Times* (1974-1993).

Richard Sweigart, interview by Kate Eggert, September 5, 2015.

Roberts, John, "Scott Forbes," *In Touch Magazine* (September 1978): 34-35.

Robert Wood Johnson Foundation. "The Five Deadliest Outbreaks and Pandemics in History." *RWJF*. December 16, 2013. Accessed October, 2016. http://www.rwjf.org/en/culture-of-health/2013/12/the_five_deadliesto.html.

Rocco, Pat, "15,000 Gays Whoop It Up At Marriott's Great America," (1979): 2 pages. Studio One and Gay Night articles, ephemera, and photos, Carol Taylor-DiPietro Collection.

Rocco, Pat, "Gay Night at Disneyland," (1978): 62-63. Studio One and Gay Night articles, ephemera, and photos, Carol Taylor-DiPietro Collection.

Rocco, Pat, various photos from Gay Nights. Studio One and Gay Night articles, ephemera, and photos, Carol Taylor-DiPietro Collection.

Rocco, Pat, "Spotlight On Studio One," *Data-Boy* (n.d.): 6-7. Studio One and Gay Night articles, ephemera, and photos, Carol Taylor-DiPietro Collection.

Scantland, Larry, "Studio One Celebrates Sixth Anniversary in Grand Style," *Data-Boy* (June 26, 1980): 2 pages.

Scoot's Blog, "What Do You Remember About the 1970s?" June 11, 2015. Accessed August 2016. http://www.wwl.com/Scoot-What-do-you-remember-about-the-1970-s-/16250790?pid=491685&do=1.

Shewey, Don, "The Ticket to Entertainment," *The Advocate* (October 5, 1977): 17.

Shilts, Randy. *And the Band Played On: Politics, People, and the AIDS Epidemic 20th Anniversary Edition*. New York: St. Martin's Griffin, 2007.

Simross, Lynn, "AIDS Horse-Auction Benefit Has a Rough Ride: $800,000 Raised in 'Gift to Life' Event in Scottsdale," *Los Angeles Times* (February 13, 1986): 2 pages.

Slater, Jack, "Discoteques Dance to Another Tune," *Los Angeles Times* (August 11, 1976): G1, G4, G5.

Smith, Arnold Jay, "It Wasn't All Harmony At Mixing Technique Session," *Billboard* (March 24, 1979): 36.

Smith, Grant. Facebook. February 3, 2015. 3:39am. Studio One Disco Nightclub - West Hollywood. https://www.facebook.com/groups/68745887988/permalink/10153493408872989/ .

Solomon, Charles, "Disco L.A.: Behind the Seen," *Los Angeles Times* (August 15, 1979): F1, F14-15.

Studio One, ONE Subject File collection, Coll2012-001, ONE National Gay & Lesbian Archives, Los Angeles, California.

Studio One and Gay Night articles, ephemera, and photos, Carol Taylor-DiPietro Collection.

Studio One, "6th Anniversary Party," *Studio One News* (June 1980) Vol 2, Issue 3. Studio One, ONE Subject File collection, Coll2012-001, ONE National Gay & Lesbian Archives, Los Angeles, California.

Studio One, Various titles, *Studio One Bulletin* (July 1981) Vol 2, Number 1: 2 pages. Studio One, ONE Subject File collection, Coll2012-001, ONE National Gay & Lesbian Archives, Los Angeles, California.

Studio One ephemera, Studio One, ONE Subject File collection, Coll2012-001, ONE National Gay & Lesbian Archives, Los Angeles, California.

Task Force on Acquired Immune Deficiency Syndrome (CDC), "Current Trends Update on Acquired Immune Deficiency Syndrome (AIDS) – United States," Morbidity and Mortality Weekly Report (September 24, 1982) Volume 31, Number 37: 507-8, 513-14. Web - http://www.cdc.gov/mmwr/preview/mmwrhtml/00001163.htm.

Thurber, Jon, "Obituaries; Scott Forbes, 57; Ran Dance Palace," *Los Angeles Times* (February 7, 2002): B15.

Thorstad, David, "Court Sends Boy Lover to Prison," *Gay Community News*. December 26, 1981. Vol 9, Issue 23, 1.

Turnbull, Martin, "Hollywood Places," *Martin Turnbull*. Accessed August 2015. http://www.martinturnbull.com/hollywood-places/.

U.S. Department of Health & Human Services, "A Timeline of HIV/AIDS," *AIDS.gov*. Accessed May 2016. https://www.aids.gov/hiv-aids-basics/hiv-aids-101/aids-timeline/.

University of Kentucky, "Brief History of the Gay and Lesbian Rights Movement in the U.S." Accessed August 2016. http://www.uky.edu/~lbarr2/gws250spring11_files/Page1186.htm

Uszler, Chris, "'Rightfully Proud' Gay & Lesbian Los Angeles: The Early Years," *Los Angeles Dispatch* (June 22, 1988): L10-11.

Venant, Elizabeth, "Art Against AIDS Joins the Fun-Raising Picture," *Los Angeles Times* (December 14, 1988): H1, H7.

West Hollywood, June Mazer Subject File, June Mazer Lesbian Archives, West Hollywood, California.

West Hollywood, ONE Subject File collection, Coll2012-001, ONE National Gay & Lesbian Archives, Los Angeles, California.

West Hollywood Community Housing Corporation (WHCHC), "Beach Warren: A Phoenix Rising." WHCHC Housing News." Winter 2012-2013. Accessed June 2016. https://whchc.org/filelibrary/22%20WINTER%202012-13.pdf.

When AIDS Was Funny. Directed by Scott Calonico. Edinburgh, Scotland: AD&D Productions, Ltd: 2015. http://www.vanityfair.com/news/2015/11/reagan-administration-response-to-aids-crisis.

Williams, Jeannie, "Calvin Klein Joins the Hampton Horsy Set," *USA Today* (July 26, 1989): 2D.

Williamson, "Misogyny and Homophobia: Patriarchy, Gender Policing, and the Male Gaze." July 29, 2015. Accessed August 2016. https://www.opendemocracy.net/5050/harriet-williamson/misogyny-and-homophobia-patriarchy-gender-policing-and-male-gaze.

World Health Organization. "HIV/AIDS." *WHO*. 2013. Accessed October 2015. http://www.who.int/gho/hiv/en/.

Worthington, Rogers, "West Hollywood Election Seen as Dawning of a Gay Camelot," *Chicago Tribune* (October 28, 1984): 1 page.

General –

ArchiTakes, "Detroit: City of the Future." August 14, 2014. Accessed March 2015. http://www.architakes.com/?p=11139.

ARG, "City of West Hollywood: R2, R3, R4 Multi-Family Survey Report," February 2008, 20.

Bentley Historical Library: University of Michigan, "Albert Kahn Papers 1896-2014." Accessed March 2015. http://quod.lib.umich.edu/b/bhlead/umich-bhl-0420?rgn=main;view=text.

City of West Hollywood, "Resolution No. CHAB 94-14," September 26, 1994.

City of West Hollywood, "Resolution No. 95-1393," January 17, 1995.

City of West Hollywood and Johnson Heumann Research Associates, "DPR: Historic Resources Inventory: Studio One, Mitchell Camera Manufacturing Company," *City of West Hollywood Historic Resources Survey* (1987).

Fine, Adrian, "Letter: Notice of Preparation for the Robertson Lane Hotel Project," *Los Angeles Conservancy*," January 23, 2015. Accessed May 2015. https://www.laconservancy.org/sites/default/files/files/issues/LA%20Conservancy%20Comments%20on%20NOP%2C%20Robertson%20Lane%20Hotel%20Project%2C%201.23.15.pdf.

GPA, City of West Hollywood Commercial Historic Resources Survey, DRAFT April 1, 2016, 56.

Heffern, Sarah, "11 Most Endangered Round-Up, Featuring Gizmodo, the Advocate, and More," *National Trust for Historic Preservation: PreservationNation blog*, June 26, 2015.

Accessed June 27, 2015. https://savingplaces.org/stories/weekend-reads-11-most-endangered-round-up-featuring-gizmodo-the-advocate-and-more#.V0OXDfkrKM8.

Johnson Heumann Research Associates (HRG), "City of West Hollywood: Historic Resources Survey 1986 – 1987," 54, 87 (Appendices – Historic Resources Inventory listed by Address, Historic Resources Inventory listed by Evaluation).

Kahn, Albert, and W. Hawkins Ferry, *The Legacy of Albert Kahn*. Detroit: Wayne State University Press, 1970.

Los Angeles Conservancy, "The Factory," 2015. Accessed February 2016. https://www.laconservancy.org/locations/factory.

National Trust for Historic Preservation, "11 Most Endangered Historic Places: The Factory," June 2015. Accessed June 2015. www.savingplaces.org/places/the-factory#.V0No0SMrJuU.

Sedlar, Frank, "Engineering Industrial Architecture: The Trussed Concrete Steel Company and Albert Kahn," April 23, 2013. Accessed July 2015. https://deepblue.lib.umich.edu/bitstream/handle/2027.42/98436/Sedlar_Engineering_Industrial_Architecture.pdf?sequence=1.

Truscon Steel Company, *O-T Open Truss Steel Joists: A product of Truscon*. Youngston, Ohio: Truscon Steel Company, 1930. Internet Archive. Web. July 18, 2014. Accessed February 12, 2015. http://archive.org/details/o-tOpenTrussSteelJoistsAProductOfTruscon.

Truscon Steel Company, *Truscon Permanent Buildings*. Youngston, Ohio: Truscon Steel Company, 1925. Internet Archive. Web. January 17, 2013. Accessed January 26, 2015. https://archive.org/details/TrusconPermanentBuildingsStandardizedForGeneralIndustries.

Previous documentation on file (NPS):

____ preliminary determination of individual listing (36 CFR 67) has been requested
____ previously listed in the National Register
____ previously determined eligible by the National Register
____designated a National Historic Landmark
____ recorded by Historic American Buildings Survey # _____
____recorded by Historic American Engineering Record # _____
____ recorded by Historic American Landscape Survey # _____

Primary location of additional data:
_X__ State Historic Preservation Office
____ Other State agency
____ Federal agency
_X__ Local government
____ University
_X__ Other
Name of repository: _SCCIC Fullerton_____

Historic Resources Survey Number (if assigned): _19-176819 Form prepared 12/1987_

10. Geographical Data

Acreage of Property _.95_____

Use either the UTM system or latitude/longitude coordinates

Latitude/Longitude Coordinates (decimal degrees)
Datum if other than WGS84:_____
(enter coordinates to 6 decimal places)
1. Latitude: 34.082556 Longitude: -118.386539

2. Latitude: Longitude:

3. Latitude: Longitude:

4. Latitude: Longitude:

Or
UTM References
Datum (indicated on USGS map):

☐ NAD 1927 or ☐ NAD 1983

1. Zone: 11	Easting: 372 170	Northing: 377 970
2. Zone:	Easting:	Northing:
3. Zone:	Easting:	Northing:
4. Zone:	Easting :	Northing:

Verbal Boundary Description (Describe the boundaries of the property.)

The primary building occupies the full footprint of lot 8, lot 38, and approximately 1/10 of lot 7 and lot 39. The primary building occupies a small portion of lot 7 (east edge) and lot 39 (west edge). The secondary building occupies half of the full footprint of lot 7. Lots 36, 37, and most of 39 have no buildings. They are parking lots. Assessor Parcel No. 4339-009-007.

Boundary Justification (Explain why the boundaries were selected.)

The proposed boundary of the property is the original boundary of the original parcel currently occupied by the building. ?

---

11. Form Prepared By

name/title: _Kate Eggert and Krisy K Gosney_____
organization: _West Hollywood Heritage Project_____
street & number: _1274 N. Crescent Heights Blvd, Apt 214 _____
city or town: West Hollywood_____ state: _CA_____ zip code:_90046_____
e-mail: _kateblaine@gmail.com, kgosney@sbcglobal.net, westhollywoodheritageproject@gmail.com
telephone:_323-481-4167_____
date: March 24, 2016, August 12, 2016_____

Additional Documentation

Submit the following items with the completed form:

- **Maps:** A **USGS map** or equivalent (7.5 or 15 minute series) indicating the property's location.

- **Sketch map** for historic districts and properties having large acreage or numerous resources. Key all photographs to this map.

- **Additional items:** (Check with the SHPO, TPO, or FPO for any additional items.)

Photographs

Submit clear and descriptive photographs. The size of each image must be 1600x1200 pixels (minimum), 3000x2000 preferred, at 300 ppi (pixels per inch) or larger. Key all photographs to the sketch map. Each photograph must be numbered and that number must correspond to the photograph number on the photo log. For simplicity, the name of the photographer, photo date, etc. may be listed once on the photograph log and doesn't need to be labeled on every photograph.

Photo Log

Name of Property:

City or Vicinity:

County: State:

Photographer:

Date Photographed:

Description of Photograph(s) and number, include description of view indicating direction of camera:

1 of ___.

Map 1

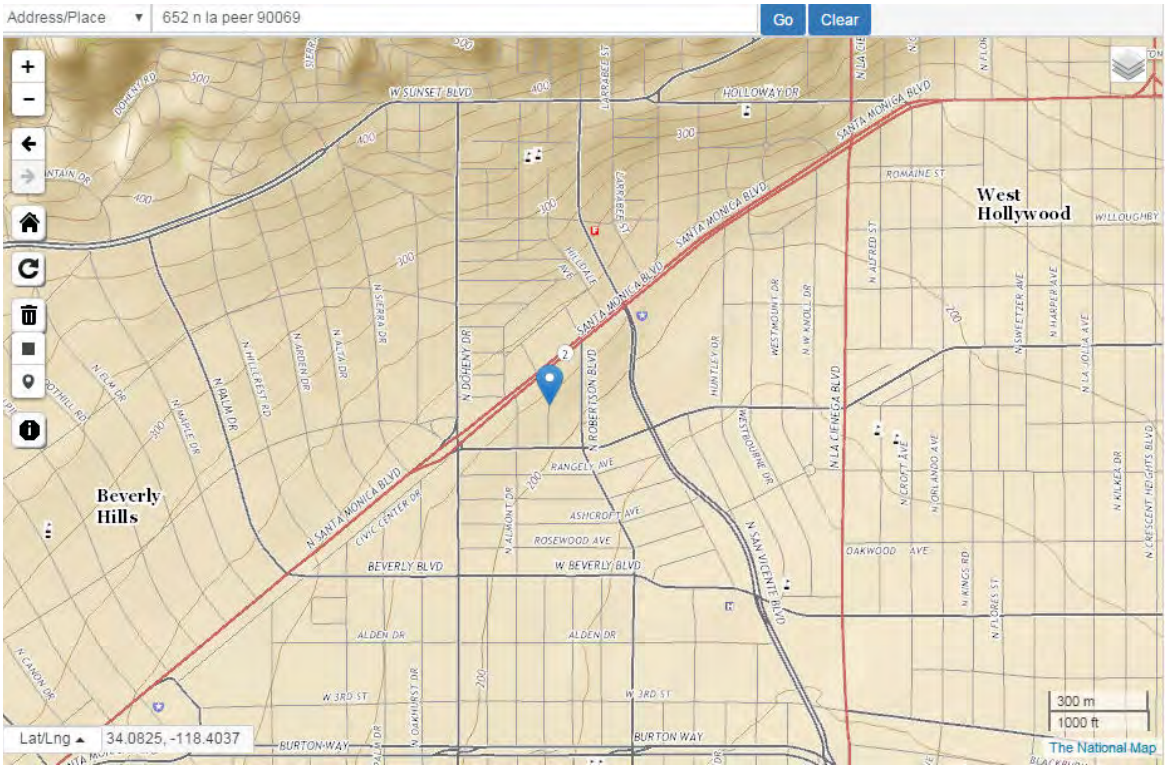
Address/Place
652 n la peer 90069
Go
Clear
West Hollywood
Beverly Hills
W SUNSET BLVD
HOLLOWAY DR
SANTA MONICA BLVD
ROMAINE ST
WILLOUGHBY
N DOHENY DR
N ROBERTSON BLVD
N LA CIENEGA BLVD
N SAN VICENTE BLVD
N SWEETZER AVE
N HARPER AVE
N LA JOLLA AVE
N ALFRED ST
N ORLANDO AVE
N CROFT AVE
N KILKER DR
N CRESCENT HEIGHTS BLVD
N KINGS RD
N FLORES ST
OAKWOOD AVE
WESTMOUNT DR
N W KNOLL DR
HUNTLEY DR
WESTBOURNE DR
RANGELY AVE
ASHCROFT AVE
ROSEWOOD AVE
BEVERLY BLVD
W BEVERLY BLVD
ALDEN DR
W 3RD ST
BURTON WAY
N SIERRA DR
N ALTA DR
N ALDEN DR
N HILLBERT RD
N BALM DR
N MAPLE DR
N ALMONT DR
N OAKHURST DR
N CANON DR
CIVIC CENTER DR
HILLDALE AVE
LARRABEE ST
DOHENY RD
Lat/Lng
34.0825, -118.4037
300 m
1000 ft
The National Map

Map 2

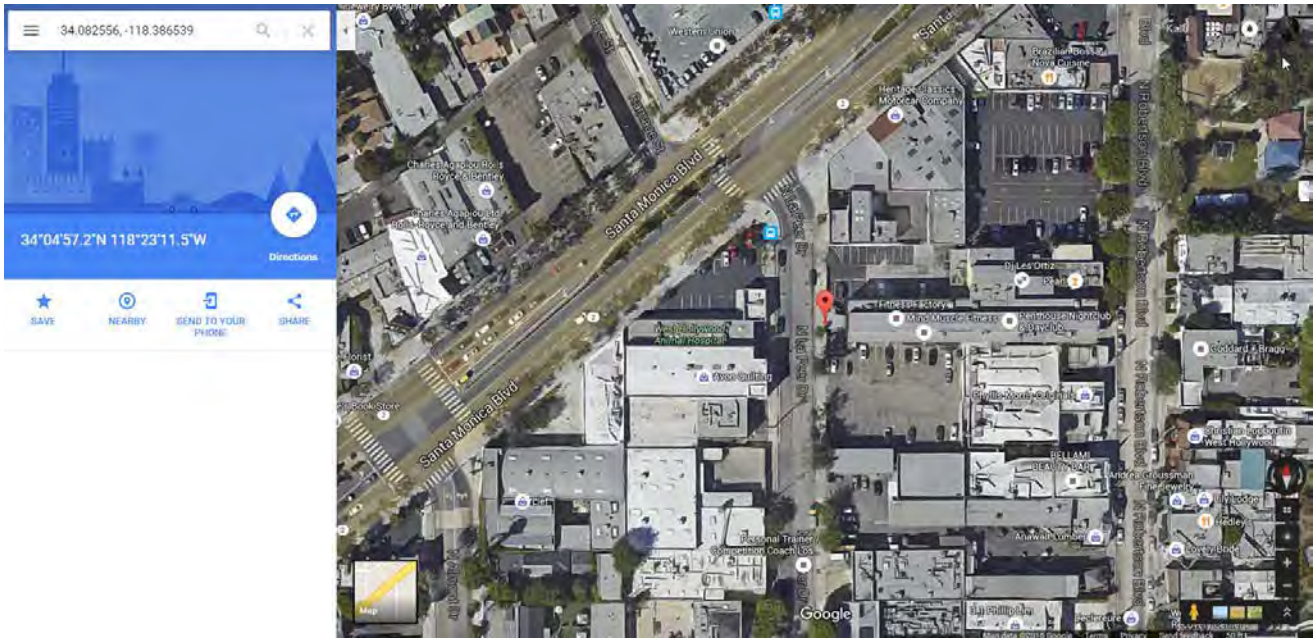
34.082556, -118.386539
34°04'57.2"N 118°23'11.5"W
Directions
SAVE
NEARBY
SEND TO YOUR PHONE
SHARE
Santa Monica Blvd
Google

Map 3

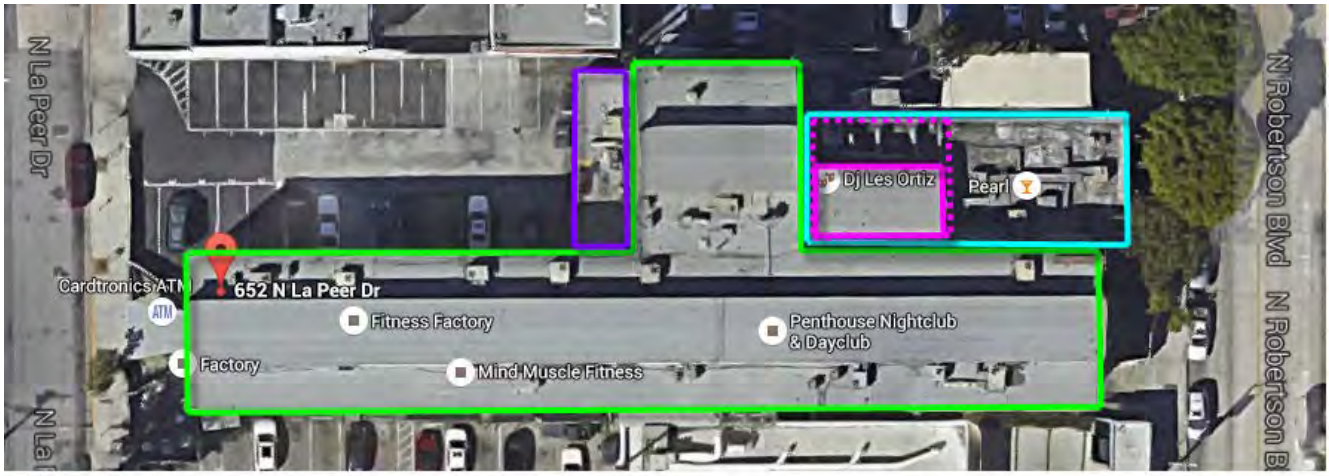

1929 Structure - Mitchell Camera Corporation Factory/Studio One Disco - Backlot Theatre

Altered 1929 structure - Mitchell Camera Corporation offices

1940 structure - Mitchell Camera Corporation drafting room

Pre-1946 structure - Mitchell Camera Corporation storage

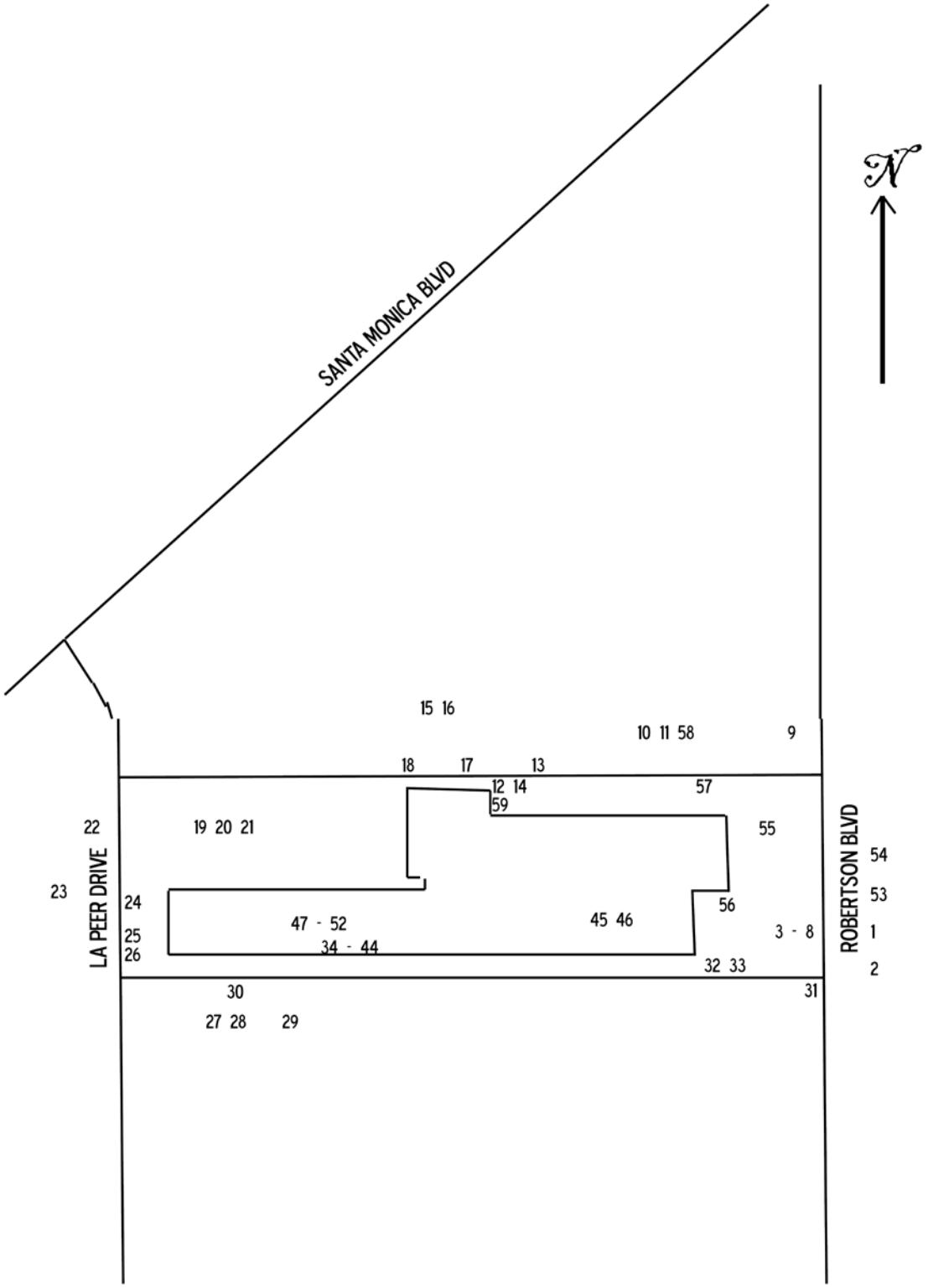
SANTA MONICA BLVD
N
15 16
10 11 58
9
18
17
13
12 14
59
57
22
19 20 21
55
54
23
24
56
53
47 - 52
45 46
3 - 8
1
25
34 - 44
26
32 33
2
30
31
27 28
29
LA PEER DRIVE
ROBERTSON BLVD

Photograph Log Page

Name of Property:	Mitchell Camera Corporation, Studio One
City or Vicinity:	West Hollywood
County:	Los Angeles
State:	CA
Name of Photographer:	Hunter Kerhart (Photos 0001-0003, 0009, 0012-0014, 0019-0022, 0028, 0030-0031), Kate Eggert
Date of Photographs:	4/28/2015, 5/24/2015
Location of Original Digital Files:	665 North Robertson Boulevard, 652 La Peer Drive
Number of Photographs:	59

CA_Los Angeles County_The Factory_0001
East façade, camera facing west

CA_Los Angeles County_The Factory_0002
South elevation (left) and east façade (right), camera facing west-northwest

CA_Los Angeles County_The Factory_0003
Upper half of east façade, camera facing west

CA_Los Angeles County_The Factory_0004
Lower half of east façade, camera facing west

CA_Los Angeles County_The Factory_0005
East façade, camera facing up and west

CA_Los Angeles County_The Factory_0006
Basement of east façade, camera facing northwest

CA_Los Angeles County_The Factory_0007
Basement of east façade detail, camera facing northwest

CA_Los Angeles County_The Factory_0008
Staircase from basement level on east façade, camera facing west-southwest

CA_Los Angeles County_The Factory_0009
North elevation (left) and east elevation of irregular projection and north elevation of irregular projection and continued north elevation (right), camera facing north-northwest

CA_Los Angeles County_The Factory_0010
North elevation (left) and east elevation of irregular projection (right), camera facing north-northeast

CA_Los Angeles County_The Factory_0011
North elevation (left) and east elevation of irregular projection and north elevation of irregular projection (right), camera facing north

CA_Los Angeles County_The Factory_0012
North elevation, camera facing northeast

CA_Los Angeles County_The Factory_0013
North elevation (left) and east elevation of irregular projection and north elevation of irregular projection (right), camera facing southwest

CA_Los Angeles County_The Factory_0014
East façade detail, camera facing southwest

CA_Los Angeles County_The Factory_0015
North elevation (left) and north elevation of irregular projection and north elevation continued (right), camera facing south

CA_Los Angeles County_The Factory_0016
North elevation (left) and north elevation of irregular projection and north elevation continued (right), camera facing south

CA_Los Angeles County_The Factory_0017
North elevation of irregular projection (left) and north elevation (right), camera facing southwest

CA_Los Angeles County_The Factory_0018
North elevation of irregular projection (left) and north elevation (right), camera facing south-southeast

CA_Los Angeles County_The Factory_0019
East elevation of irregular projection (left) and north elevation (right), camera facing east

CA_Los Angeles County_The Factory_0020
East elevation of irregular projection (left) and north elevation (right), camera facing east-southeast

CA_Los Angeles County_The Factory_0021
East elevation of irregular projection (left) and north elevation (right), camera facing east-southeast

CA_Los Angeles County_The Factory_0022
East elevation of irregular projection and north elevation (left) and east façade, camera facing east-southeast

CA_Los Angeles County_The Factory_0023
West elevation of irregular projection (left) and west façade, camera facing east

CA_Los Angeles County_The Factory_0024
West façade detail, camera facing east-southeast

CA_Los Angeles County_The Factory_0025
West façade detail, camera facing east

CA_Los Angeles County_The Factory_0026
West façade detail (left) and south elevation (right), camera facing east-northeast

CA_Los Angeles County_The Factory_0027
South elevation, camera facing north

CA_Los Angeles County_The Factory_0028
South elevation, camera facing north-northeast

CA_Los Angeles County_The Factory_0029
South elevation, camera facing north-northeast

CA_Los Angeles County_The Factory_0030
South elevation detail, camera facing north

CA_Los Angeles County_The Factory_0031
South elevation (left) and east façade (right), camera facing north-northwest

CA_Los Angeles County_The Factory_0032
Neighboring building (left) and south elevation and east façade (right), camera facing west

CA_Los Angeles County_The Factory_0033
Neighboring building (left) and basement level of south elevation (right), camera facing west

CA_Los Angeles County_The Factory_0034
Interior 1st floor ceiling steel joists and open truss steel joists, camera facing upward and west

CA_Los Angeles County_The Factory_0035
Interior 1st floor ceiling steel joists and open truss steel joists and steel sash windows, camera facing upward and west-northwest

CA_Los Angeles County_The Factory_0036
Interior 1st floor ceiling open truss steel joist detail and steel sash windows, camera facing upward and west

CA_Los Angeles County_The Factory_0037
Interior 1st floor steel sash windows (left) and open truss steel joist and motorized sectional steel door, camera facing south-southwest

CA_Los Angeles County_The Factory_0038
Interior 1st floor steel sash windows detail, camera facing south

CA_Los Angeles County_The Factory_0039
Interior 1st floor reinforced concrete block and copper steel sidewall panels and steel sash windows, camera facing south

CA_Los Angeles County_The Factory_0040
Interior 1st floor reinforced concrete block and copper steel sidewall panels and steel sash windows detail, camera facing west-southwest

CA_Los Angeles County_The Factory_0041
Interior 1st floor steel column and base detail and floor made of sawed wood blocks set in concrete slabs detail, camera facing west-northwest

CA_Los Angeles County_The Factory_0042
Interior 1st floor concrete block wall (left) and partition of steel sash windows and reinforced plaster (right), camera facing west, northwest

CA_Los Angeles County_The Factory_0043
Interior 1st floor detail of sawed wood blocks set in concrete slabs, camera facing downward

CA_Los Angeles County_The Factory_0044
Interior 1st floor detail of sawed wood blocks set in concrete slabs, camera facing downward

CA_Los Angeles County_The Factory_0045
Interior 2nd floor (formerly The Backlot) open truss steel joists and monitor, camera facing west

CA_Los Angeles County_The Factory_0046
Interior 2nd floor (formerly The Backlot) open truss steel joists and monitor detail, camera facing upward and west

CA_Los Angeles County_The Factory_0047
Interior 2nd floor (formerly Studio One) center span trusses (horizontal) and open truss steel joists and monitor (vertical), camera facing west

CA_Los Angeles County_The Factory_0048
Interior 2nd floor (formerly Studio One) center span trusses (horizontal) and open truss steel joists and monitor (vertical), camera facing east

CA_Los Angeles County_The Factory_0049
Interior 2nd floor (formerly Studio One) open truss steel joists and monitor with soundproof material (left) and center span truss (right), camera facing upward and north

CA_Los Angeles County_The Factory_0050
Interior 2nd floor made of sawed wood blocks set in concrete slabs detail, camera facing downward

CA_Los Angeles County_The Factory_0051
Interior 2nd floor made of sawed wood blocks set in concrete slabs and Mitchell Camera Corporation electric motor station bases, camera facing downward

CA_Los Angeles County_The Factory_0052
Interior 2nd floor made of sawed wood blocks set in concrete slabs and Mitchell Camera Corporation electric motor station base detail, camera facing downward

CA_Los Angeles County_The Factory_0053
East façade of primary and secondary building, camera facing west

CA_Los Angeles County_The Factory_0054
East façade of secondary building, camera facing west

CA_Los Angeles County_The Factory_0055
East façade of secondary building detail of recessed porch, camera facing west-northwest

CA_Los Angeles County_The Factory_0056
South elevation of secondary building (left) and east façade detail of metal panel on stucco surface (right), camera facing north-northwest

CA_Los Angeles County_The Factory_0057
North elevation of secondary building, camera facing south

CA_Los Angeles County_The Factory_0058
North elevation of primary and secondary building, camera facing south

CA_Los Angeles County_The Factory_0059
North elevation detail of secondary building (left) and east elevation of primary buildings detail (right), camera facing south-southwest

Index of Figures

Figure 1
Promotional photographs were featured on the back covers of American Cinematographer and International Photographer throughout the construction in 1929. (Photo courtesy of American Cinematographer)

Figure 2
Mitchell Camera Corp factory promotional photograph, 1929. (Photo courtesy of American Cinematographer)

Figure 3
2016 photograph showing painted Truscon metal panels and windows, and replaced single-pane windows on second floor and monitor. South façade.

Figure 4
The Factory photographed at the La Peer Drive entrance, 1969. (Photo courtesy of Bobby Cole)

Figure 5
Studio One entrance, 1978. (Photo courtesy of Robert Bazan)

Figure 6
Sawed end grain wood block flooring (set in concrete slabs) was a special request by Mitchell so their workers would be comfortable on their feet, 1929. (Photo courtesy of International Photographer)

Figure 7
Seen here are exposed trusses and joists. Note the white enamel paint on the monitor, which reflected light down to the workers. The many windows offered ventilation and could be opened by a “Truscon Mechanical Operator.” 1929. (Photo courtesy of International Photographer)

Figure 8
Breaking ground at the new Mitchell Camera Corp factory and offices, 1929. (Photo courtesy of American Cinematographer)

Figure 9
First floor of Mitchell Camera Corp factory. (Photo courtesy of Mitchell Motion Picture Cameras catalog, 1934)

Figure 10
Saturday night dance at the Gay Activist’s Alliance leased firehouse, Manhattan, 1971. (Photo courtesy of *Hot Stuff: Disco and the Remaking of American Culture* by Alice Echols)

Figure 11
Studio One dance floor, 1976. (Photo courtesy of Jack Wheeler)

Figure 12
Studio One entrance, Gay Pride 1979. (Photo courtesy of Richard "Lightman" Lindemann, discomusic.com)

Figure 13
Community Advisory Board meeting of the Los Angeles Gay Community Services Center (Los Angeles LGBT Center) at Sheldon Andelson's house, 1977. (Photo courtesy of Carol Taylor-DiPietro)

Figure 14
Gay Night at Disneyland, May 24, 1978. Photo spread likely from Data-Boy. (Photo courtesy of Carol Taylor-DiPietro)

Figure 15
The Backlot Theatre set up for an evening show, circa 1980. (Photo courtesy of Jude Edwards, discomusic.com)

Figure 16
Scott Forbes standing on the Studio One dance floor before opening in 1974. (Photo courtesy of Jack Wheeler)

Figure 17
Joan Rivers' publicity poster for AIDS benefit at the Backlot, 1984. (Photo courtesy of Dan Morin)

Figure 18
Camera Record of BNCs sold between 1934 – 1946. Note: BNCs sold in 1947 were likely made at the West Hollywood factory. (Photo courtesy of Douglas Denoff)

Figure 19
On the set of Citizen Kane, Orson Welles leans on Mitchell BNC-2 while cinematographer Gregg Toland talks to the crew, 1940. (Photo courtesy of RKO)

Figure 1

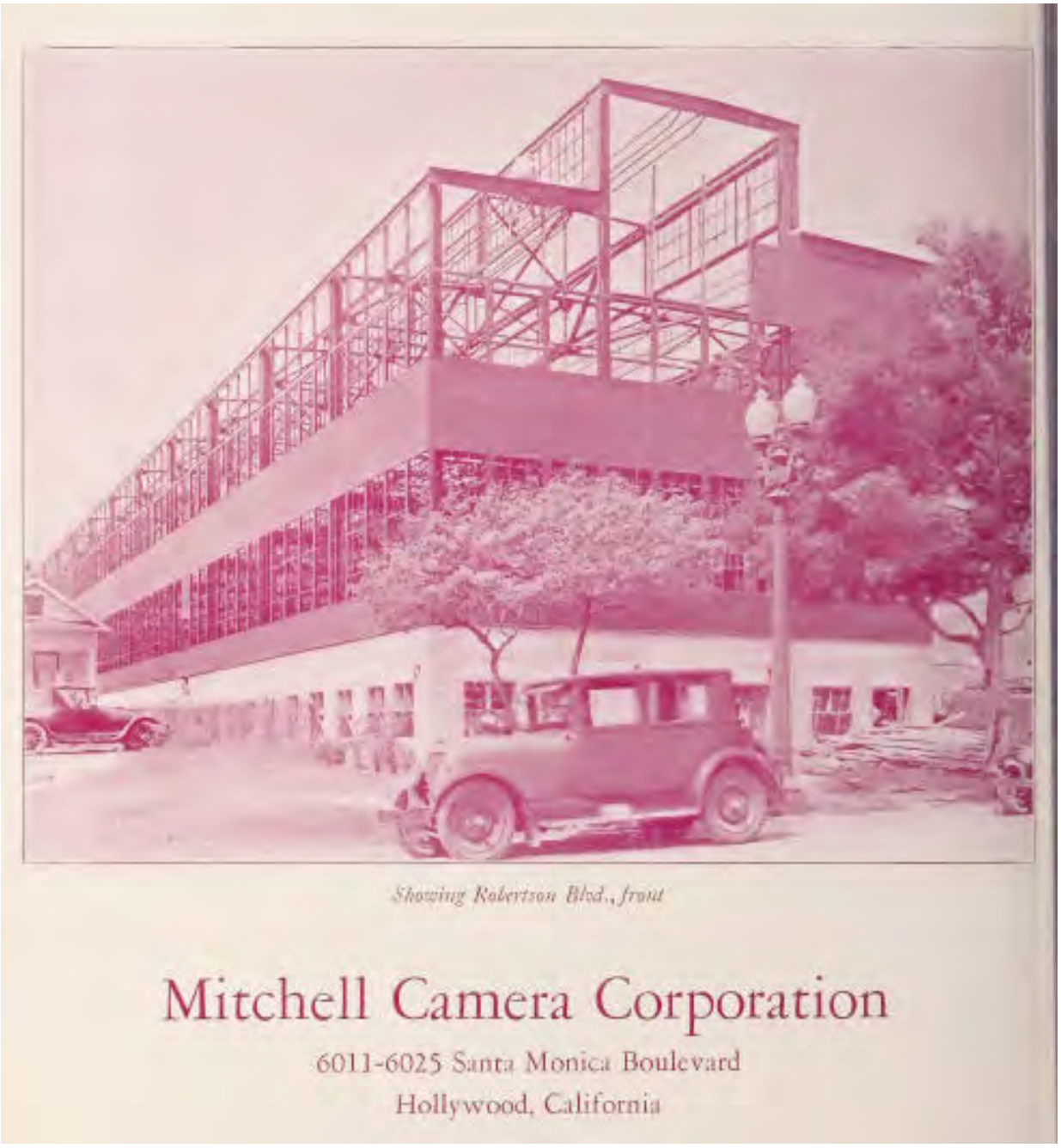

Promotional photographs were featured on the back covers of American Cinematographer and International Photographer throughout the construction in 1929.

Photo courtesy of : American Cinematographer

Figure 2

Mitchell Camera Corp factory promotional photograph, 1929.

Photo courtesy of: American Cinematographer

Figure 3

2016
Painted Truscon copper steel panels and Truscon windows
Showing north elevation and east facade

16 replaced single-pane windows on second floor;
15 replaced single sliding windows on monitor.
23; 44

Figure 4

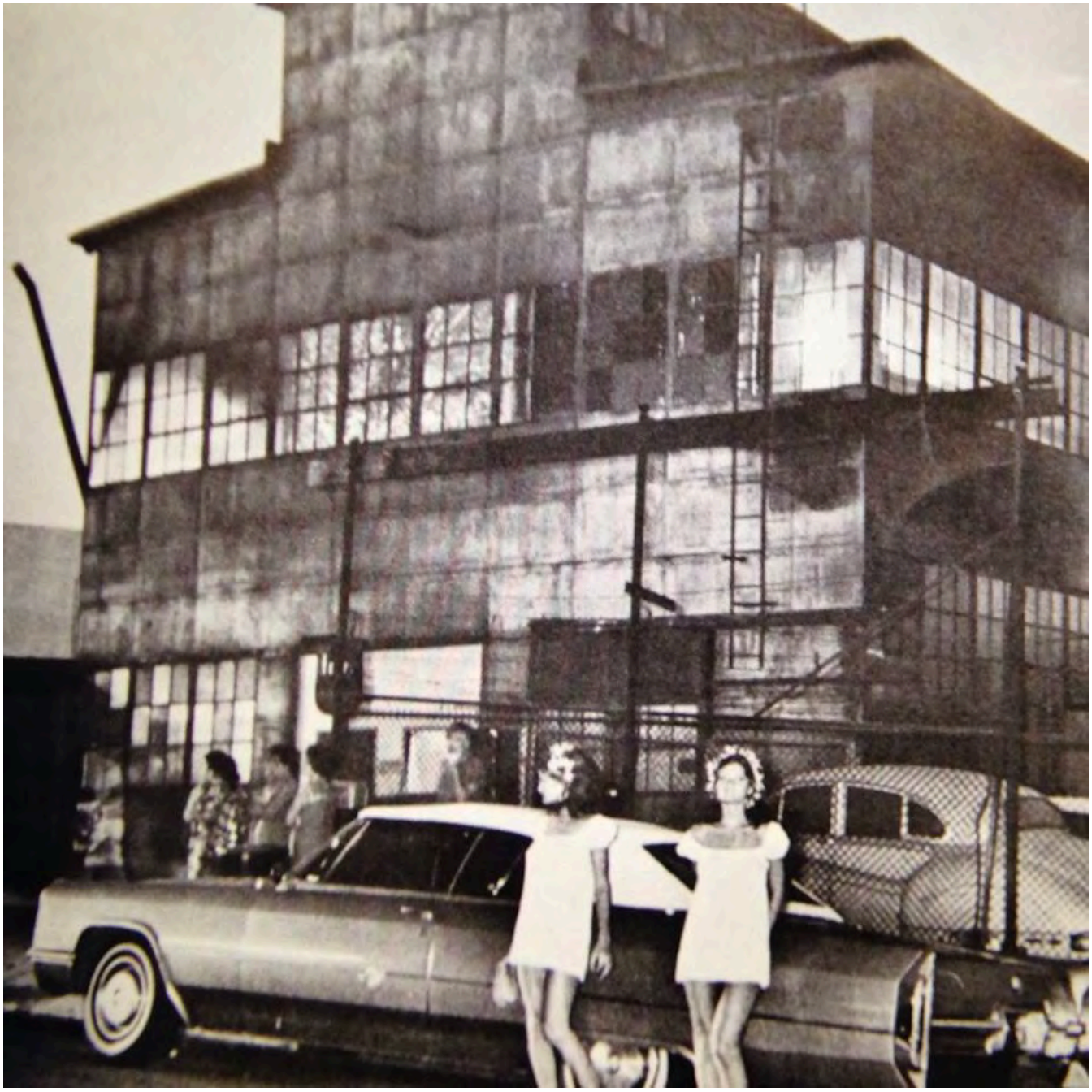

The Factory photographed at the La Peer Drive entrance, 1969.

Photo courtesy of: Bobby Cole

Figure 5

Studio One entrance, 1978.

Photo courtesy of: Robert Bazan

Figure 6

Sawed end grain wood block flooring (set in concrete slabs) was a special request by Mitchell so their workers would be comfortable on their feet, 1929.

Photo courtesy of: International Photographer

Figure 7

Showing Wood Block Floor, Second Floor of New Factory Building.

Mitchell Camera Corporation
6011-6025 Santa Monica Boulevard
Hollywood, California
CABLE address "MITCAMCO"

Seen here are exposed trusses and joists. Note the white enamel paint on the monitor, which reflected light down to the workers. The many windows offered ventilation and could be opened by a "Truscon Mechanical Operator."

Photo courtesy of: International Photographer

Figure 8

Thirty-four AMERICAN CINEMATOGRAPHER February, 1929

The Mitchell's New Home

Great Business Expansion Forces Local Camera Corporation to Erect Big Plant—$300,000 Investment Involved

The great growth of the Mitchell Camera Corporation since its organization nearly eight years ago is evidenced by the fact that ground was broken at 1 o'clock Monday afternoon, January 21, for a new factory and administration building at 661 Robertson Avenue, Sherman.

The new factory site is about midway between Westwood and Hollywood and convenient to both Hollywood and the rapidly growing production center in the San Fernando Valley. The building, plans for which were drawn by the Truscon Steel Co., will contain 26,000 feet of factory floor space and will be constructed of concrete, steel and glass, absolutely earthquake and fire proof.

The floors will be of sawed wood blocks set in concrete slabs for the comfort of the factory operatives and every possible convenience will be installed. All four walls are set back at least five feet from the property lines, so that there will be no spot in the entire building more than twenty feet from daylight.

The building will front 100 feet on Robertson Avenue and the main factory structure will be 240 feet long and two stories high, with a three-story addition to be erected after the main factory building is occupied and in production. This three-story building will be occupied by the business offices, research department, etc.

Within ninety days from the ground-breaking the factory will be ready for the installation of $50,000.00 worth of absolutely new equipment, including one hundred and twenty electric motors to be used for driving the machines. There will be no line shafts. Every machine will have its individual motor.

By October 1 all the machinery of the present plant, 6011-6025 Santa Monica Boulevard, will be removed to the new quarters and the consolidated equipment will then represent the largest concern of the kind in the world.

The new building alone, exclusive of the realty, is costing $60,000.00, and the entire investment will aggregate approximately $300,000.00.

The Mitchell Camera Corporation, while devoting its resources to the perfection of its several types of cameras, has not been idle in other directions and, from time to time, news important to the technical side of the industry will be forthcoming from the Robertson Avenue plant, but no announcements will be made until the several products in process of perfection are ready for the market.

THE AMERICAN CINEMATOGRAPHER and the A. S. C. congratulates the Mitchell Camera Corporation upon attaining this great success in so short a time and bespeak for this wise, far-seeing and enterprising organization even greater success in the years to come. Personal congratulations are extended to President Hy. F. Boeger, president, and George Mitchell and their associates in the invention and development of the Mitchell camera which, within less than a decade, has come into international use.

Left to right: Dwight Lanning, Fred Yost, Robt. H. Gless, R. F. Skrympton, John E. Champion, President West Hollywood Chamber of Commerce, Berry Barrett, Secretary West Hollywood Chamber of Commerce, President Hy F. Boeger and Secretary George H. Mitchell of the Mitchell Camera Corporation, breaking ground for their wonderful new home.

Breaking ground at the new Mitchell Camera Corp factory, 1929.

Photo courtesy of: American Cinematographer

Figure 9

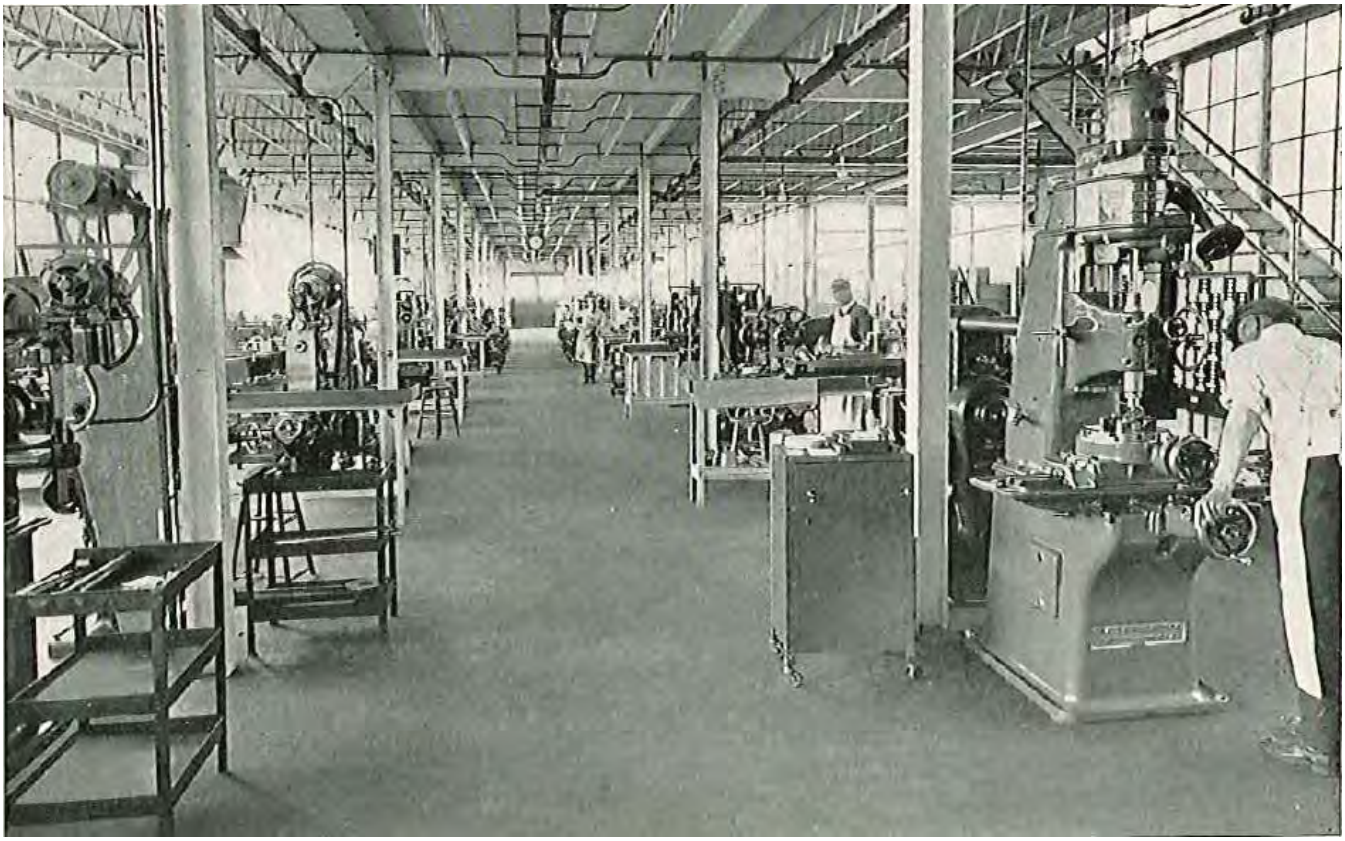

First floor of Mitchell Camera Corp factory, 1934.

Photo courtesy of: Mitchell Camera Corporation, Joe Dunton

Figure 10

Saturday night dance at the Gay Activist's Alliance leased firehouse, Manhattan, 1971.

Photo courtesy of: *Hot Stuff: Disco and the Remaking of American Culture* by Alice Echols

Figure 11

Studio One dance floor, 1976.

Photo courtesy of: Jack Wheeler

Figure 12

Studio One entrance, Gay Pride 1979.

Photo courtesy of: Richard "Lightman" Lindemann, discomusic.com

Figure 13

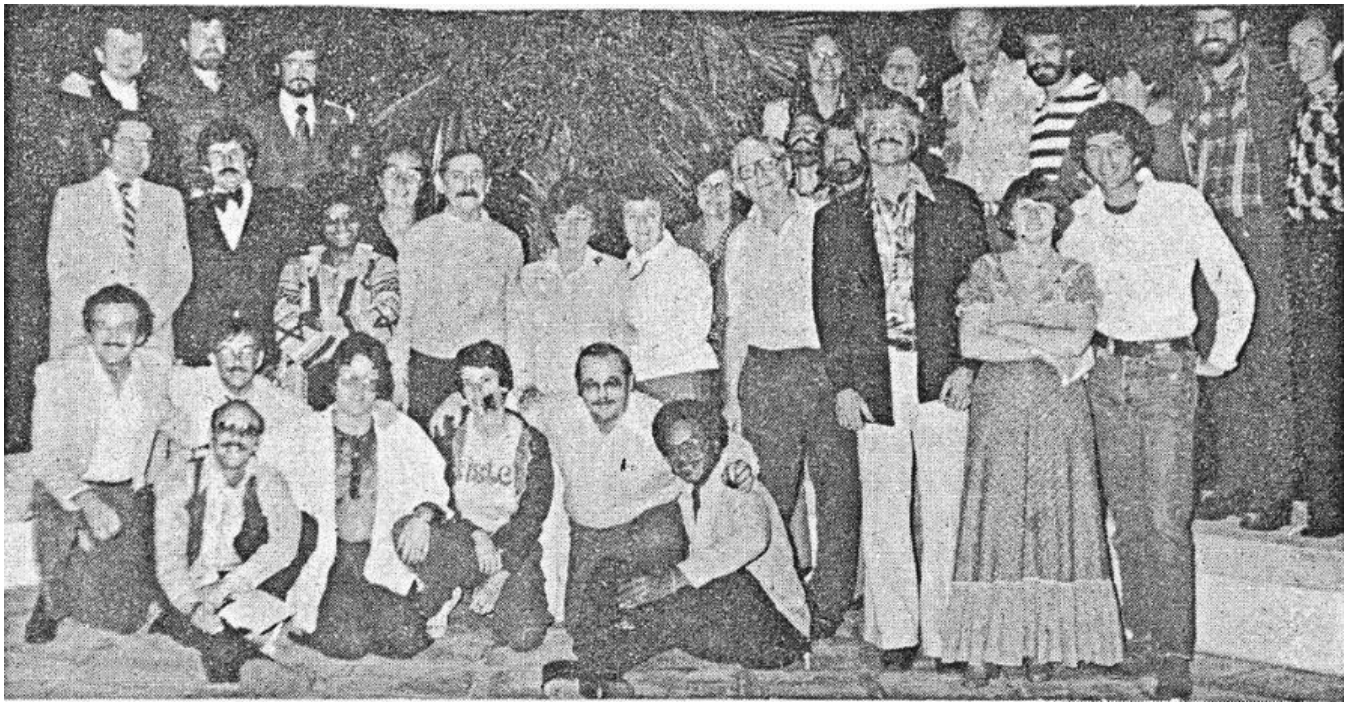

Community Advisory Board meeting of the Los Angeles Gay Community Services Center (Los Angeles LGBT Center) at Sheldon Andelson's house, 1977.

Photo courtesy of: Carol Taylor-DiPietro

Figure 14

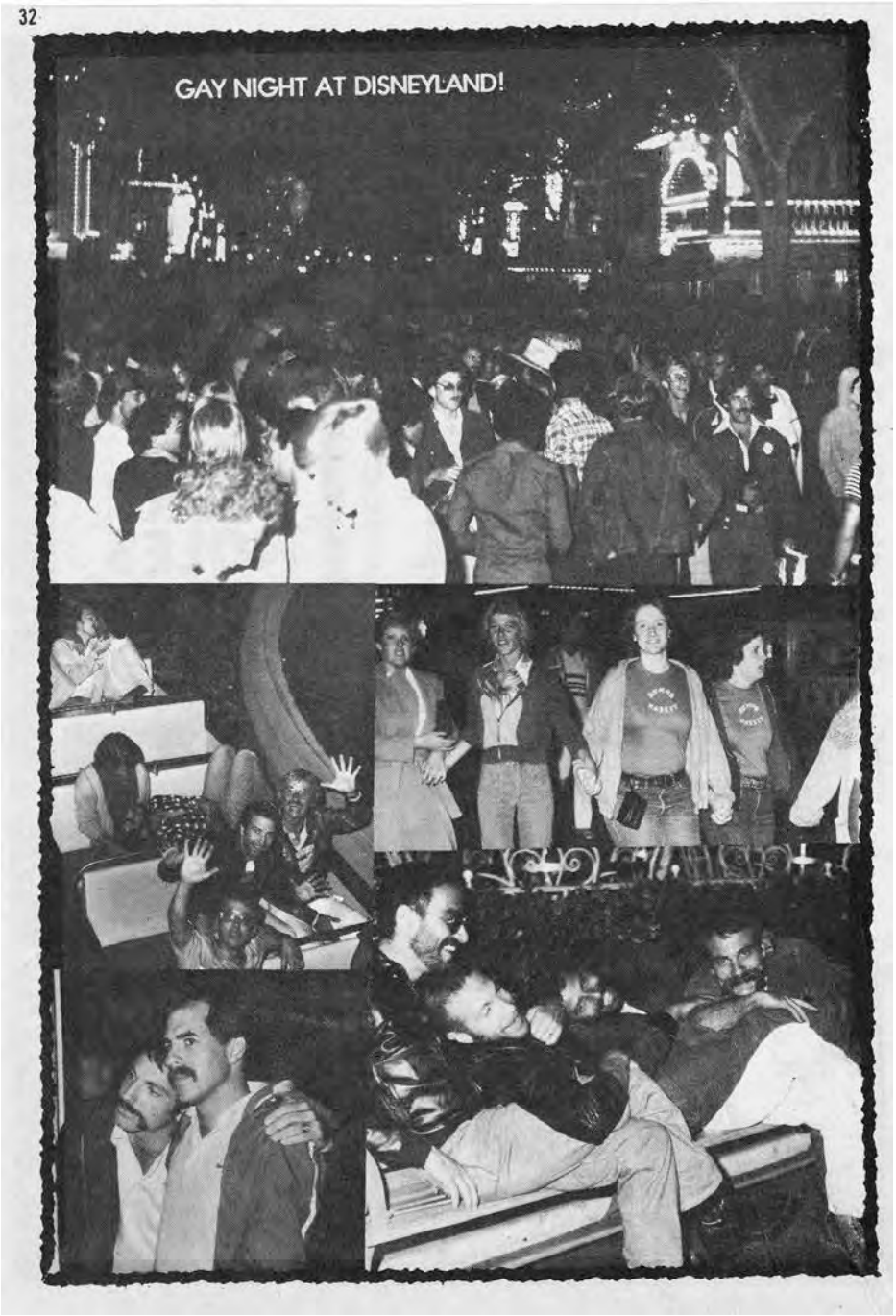

Gay Night at Disneyland, May 24, 1978. Photo spread likely from Data-Boy.

Photo courtesy of: Carol Taylor-DiPietro

Figure 15

The Backlot Theatre set up for an evening show, circa 1980.

Photo courtesy of: Jude Edwards, discomusic.com

Figure 16

Scott Forbes standing on the Studio One dance floor before opening in 1974.
Photo courtesy of: Jack Wheeler

Figure 17

Joan Rivers' publicity poster for AIDS benefit at the Backlot, 1984.

Photo courtesy of: Dan Morin

Figure 18

STUDIO MODEL CAMERA RECORD

BNC-1	8-17-34	Samuel Goldwyn, Inc. Fred. 1970 Camera Supply
BNC-2	8-6-35	~~Samuel Goldwyn Inc.~~ Fred J. Benjy Fontier 7/54
BNC-3	~~12-6-40~~	~~General Pictures~~
BNC-4	~~1-6-41~~	~~Universal Pictures Corporation Inc.~~
BNC-5	3-15-38	Warner Bros Pictures Inc.
BNC-6	4-15-38	Warner Bros Pictures Inc.
BNC-7	4-29-38	Warner Bros Pictures Inc.
BNC-8	5-13-38	Warner Bros Pictures Inc.
BNC-9	6-2-38	Warner Bros Pictures Inc. England
BNC-10	6-10-38	Warner Bros Pictures Inc. England
BNC-11	7-15-38	Warner Bros. Pictures Inc.
BNC-12	7-6-38	Warner Bros Pictures Inc.
BNC-13		Not Made
BNC-14	8-3-38	Warner Bros. Pictures Inc.
BNC-15	9-15-38	Warner Bros. Pictures Inc.
BNC-16	5-16-39	Selznick International Pictures Inc.
BNC-17	6-13-39	Famous Pictures Co. Inc.
BNC-18	~~4-3-39~~	~~Motion Picture Camera Supply Inc.~~ Amborg
BNC-19	7-10-39	Universal Pictures Co. Inc.
BNC-20	10-10-39	~~Fox Film Corp. Inc.~~ Mark Armistead
BNC-21	4/26/46	General Service
BNC-22	5/20/46	General Service
BNC-23	8/21/46	Hal Roach
BNC-24	12/21/46	Pacific International Corp.
BNC-25	9/6/46	Nat'l. Film Board (Was not complete 7/65)
BNC-26	8/26/46	Solomon Selma (Rca Corp)
BNC-27	11/27/46	Fogelsby, Ltd.
BNC-28		
BNC-29	10/4/46	Republic Productions
BNC-30	1/7/47	Skirball Manning Inc. & Jo Valentine
BNC-31	12/13/46	Rural Education Film Corp. Burt Lipp. 1974
BNC-32	1/7/47	Mark Armistead

Camera Record of BNCs sold between 1934 – 1946. Note: BNCs sold in 1947 were likely made at the West Hollywood factory.

Photo courtesy of: Douglas Denoff

Figure 19

On the set of Citizen Kane, Orson Welles leans on Mitchell BNC-2 while cinematographer Gregg Toland talks to the crew, 1940.

Photo courtesy of: RKO

Paperwork Reduction Act Statement: This information is being collected for applications to the National Register of Historic Places to nominate properties for listing or determine eligibility for listing, to list properties, and to amend existing listings. Response to this request is required to obtain a benefit in accordance with the National Historic Preservation Act, as amended (16 U.S.C.460 et seq.).

Estimated Burden Statement: Public reporting burden for this form is estimated to average 100 hours per response including time for reviewing instructions, gathering and maintaining data, and completing and reviewing the form. Direct comments regarding this burden estimate or any aspect of this form to the Office of Planning and Performance Management. U.S. Dept. of the Interior, 1849 C. Street, NW, Washington, DC.

CA_Los Angeles County_The Factory_0001

CA_Los Angeles County_The Factory_0002

CA_Los Angeles County_The Factory_0003

CA_Los Angeles County_The Factory_0004

CA_Los Angeles County_The Factory_0005

CA_Los Angeles County_The Factory_0006

CA_Los Angeles County_The Factory_0007

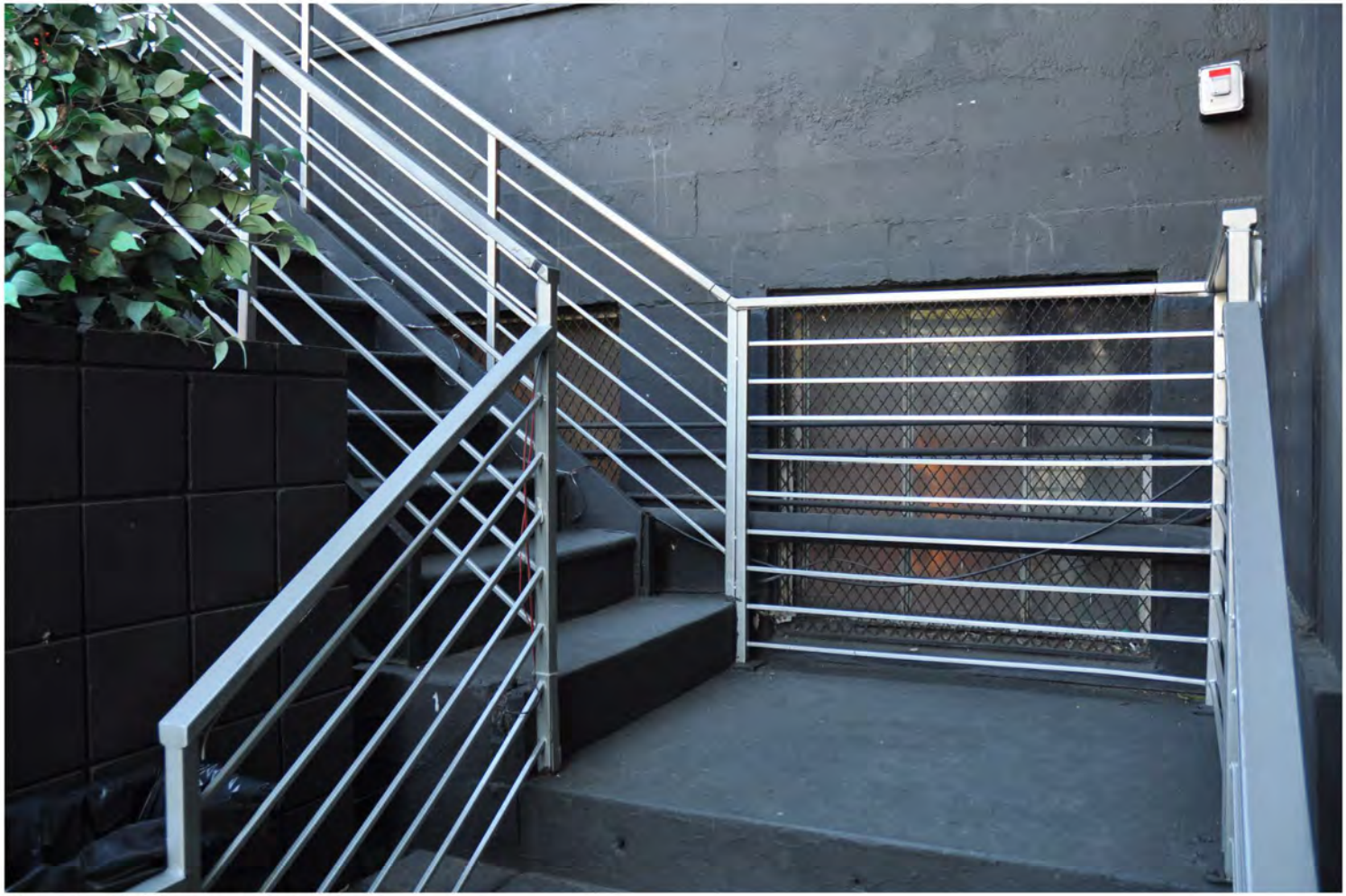

CA_Los Angeles County_The Factory_0008

CA_Los Angeles County_The Factory_0009

CA_Los Angeles County_The Factory_0010

CA_Los Angeles County_The Factory_0011

CA_Los Angeles County_The Factory_0012

CA_Los Angeles County_The Factory_0013

CA_Los Angeles County_The Factory_0014

CA_Los Angeles County_The Factory_0015

CA_Los Angeles County_The Factory_0016

CA_Los Angeles County_The Factory_0017

CA_Los Angeles County_The Factory_0018

CA_Los Angeles County_The Factory_0019

CA_Los Angeles County_The Factory_0020

CA_Los Angeles County_The Factory_0021

CA_Los Angeles County_The Factory_0022

CA_Los Angeles County_The Factory_0023

CA_Los Angeles County_The Factory_0024

CA_Los Angeles County_The Factory_0025

CA_Los Angeles County_The Factory_0026

CA_Los Angeles County_The Factory_00027

CA_Los Angeles County_The Factory_0028

CA_Los Angeles County_The Factory_0029

CA_Los Angeles County_The Factory_0030

CA_Los Angeles County_The Factory_0031

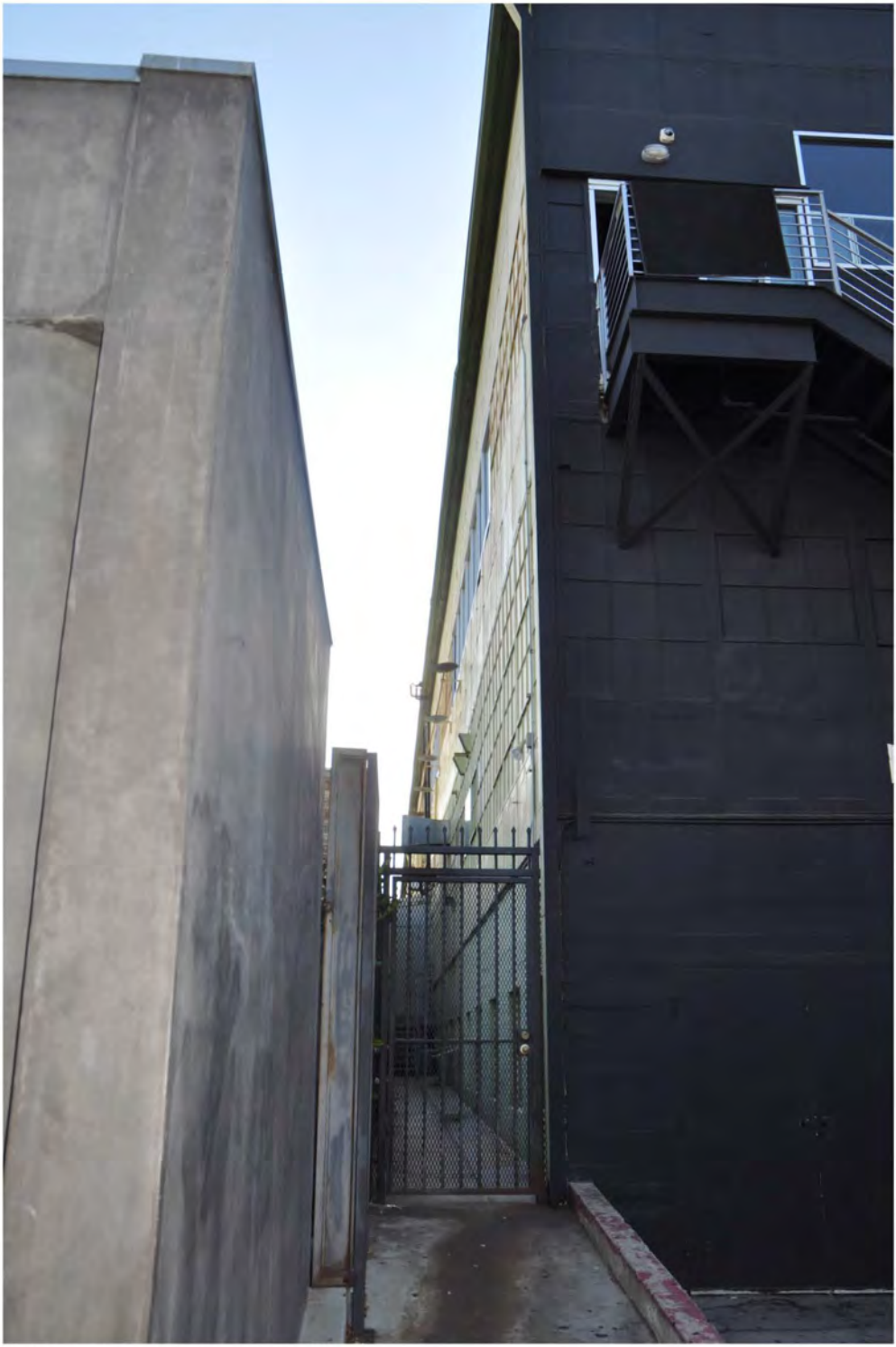

CA_Los Angeles County_The Factory_0032

CA_Los Angeles County_The Factory_0033

CA_Los Angeles County_The Factory_0034

CA_Los Angeles County_The Factory_0035

CA_Los Angeles County_The Factory_0036

CA_Los Angeles County_The Factory_0037

CA_Los Angeles County_The Factory_0038

CA_Los Angeles County_The Factory_0039

CA_Los Angeles County_The Factory_0040

CA_Los Angeles County_The Factory_0041

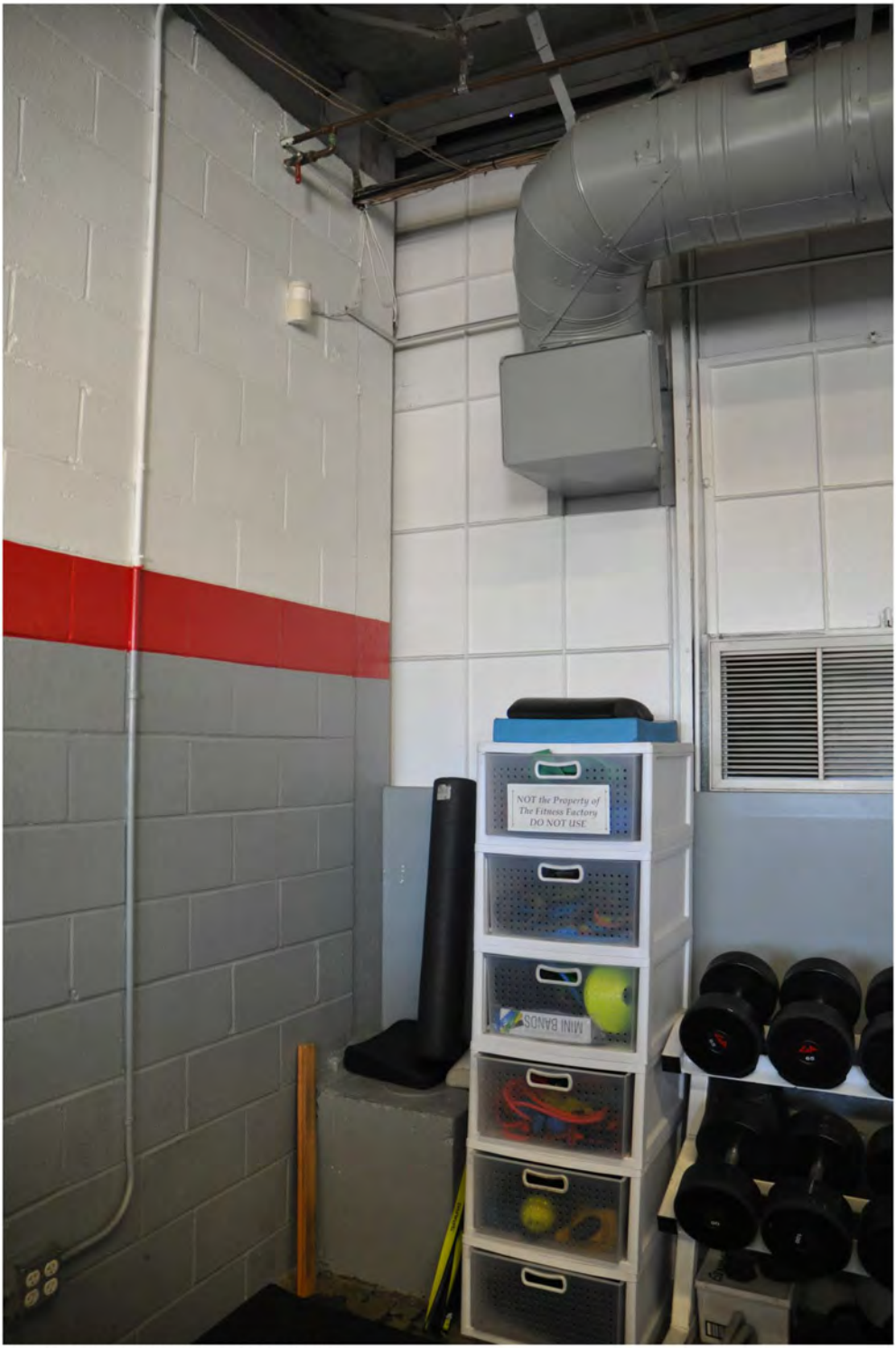

CA_Los Angeles County_The Factory_0042

CA_Los Angeles County_The Factory_0043

CA_Los Angeles County_The Factory_0044

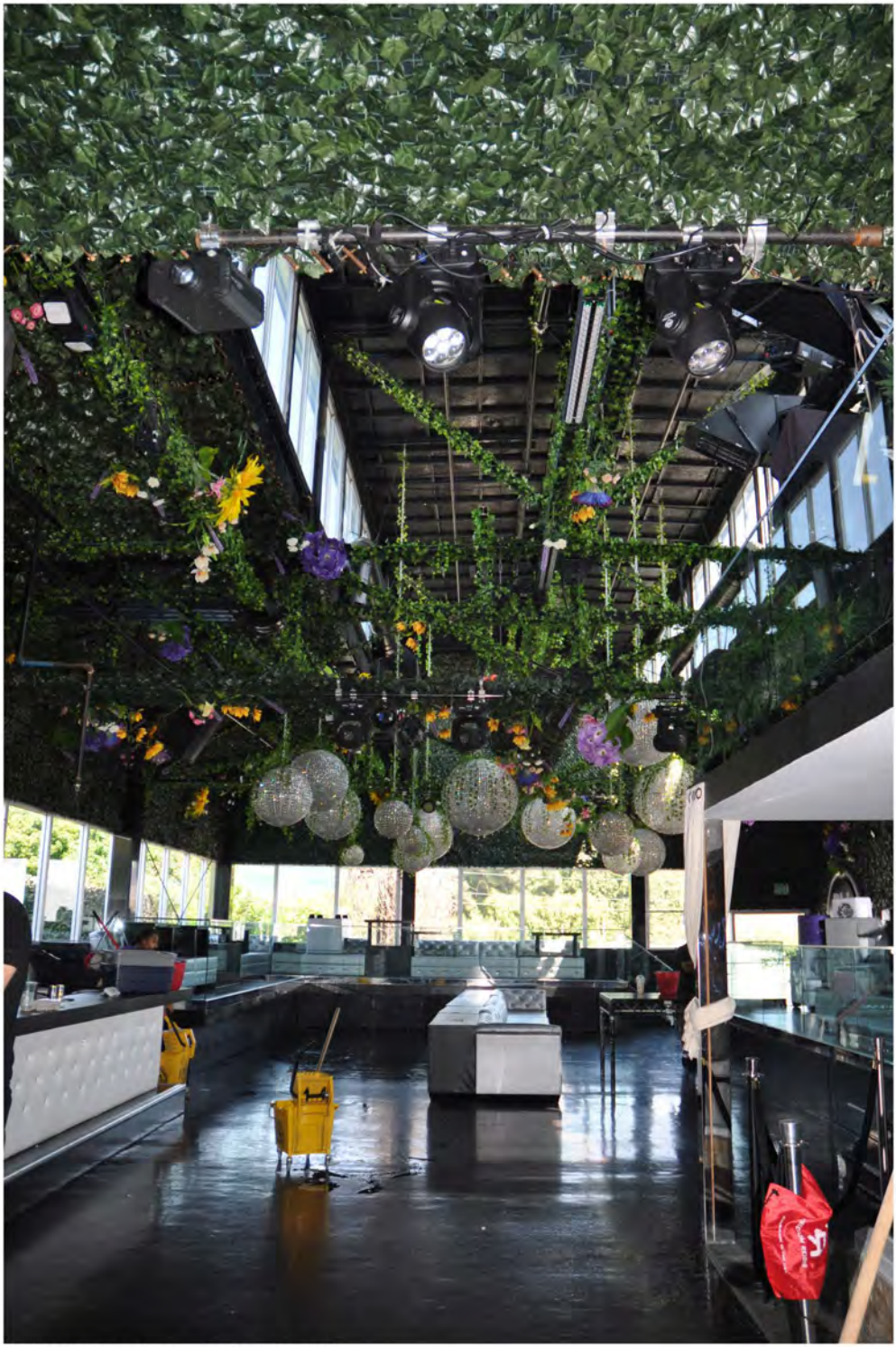

CA_Los Angeles County_The Factory_0045

CA_Los Angeles County_The Factory_0046

CA_Los Angeles County_The Factory_0047

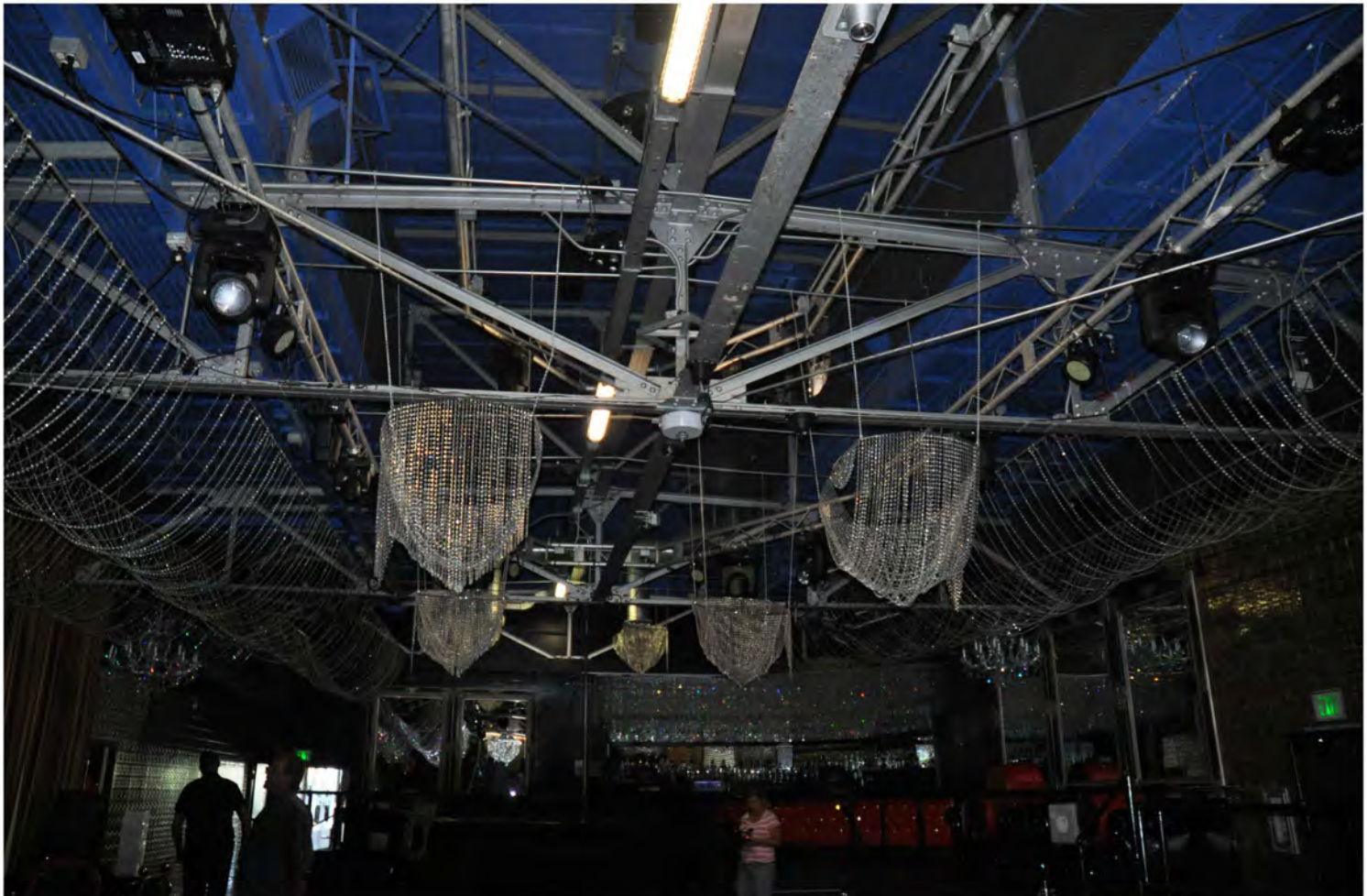

CA_Los Angeles County_The Factory_0048

CA_Los Angeles County_The Factory_0049

CA_Los Angeles County_The Factory_0050

CA_Los Angeles County_The Factory_0051

CA_Los Angeles County_The Factory_0052

CA_Los Angeles County_The Factory_0053

CA_Los Angeles County_The Factory_0054

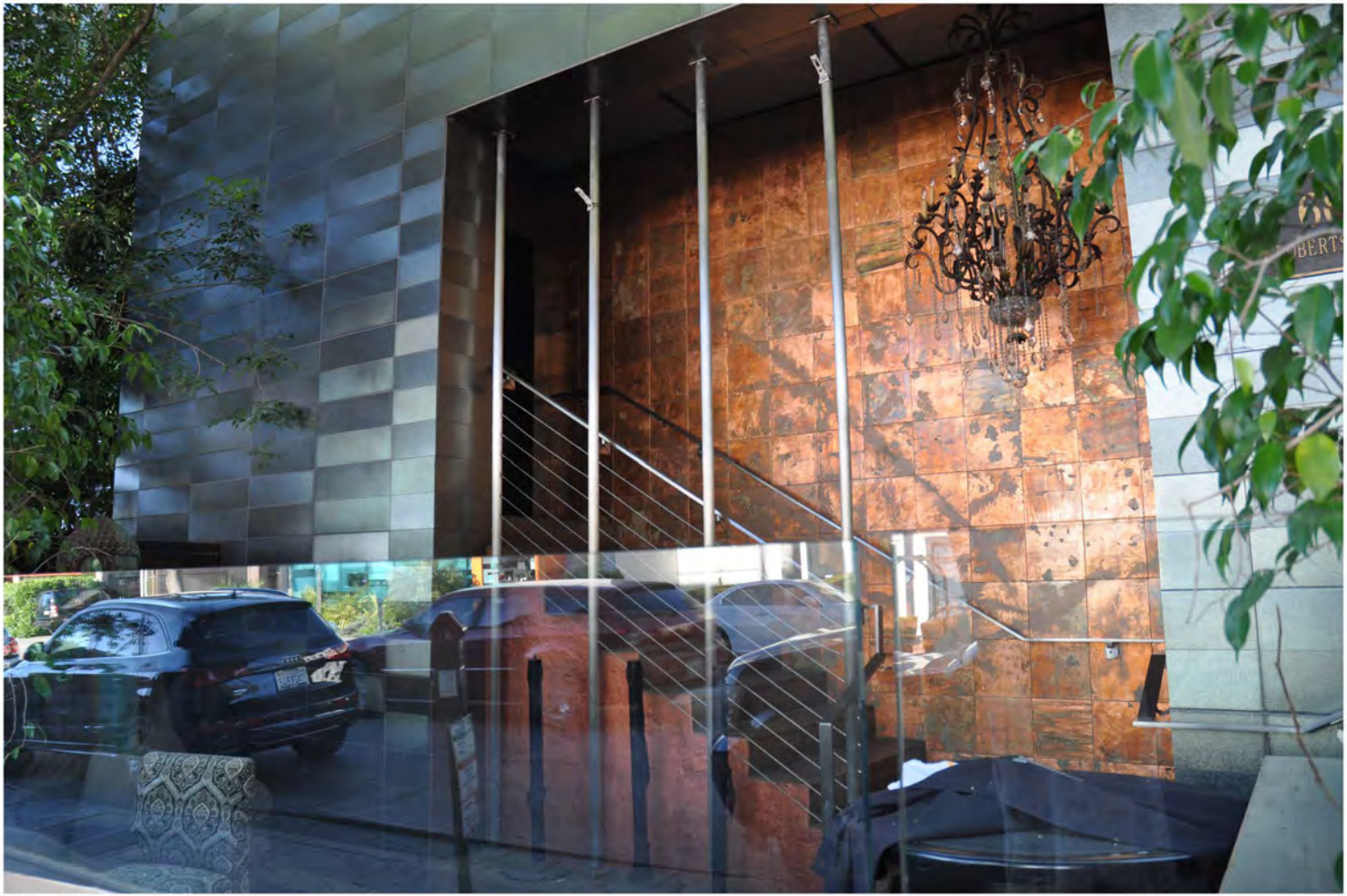

CA_Los Angeles County_The Factory_0055

CA_Los Angeles County_The Factory_0056

CA_Los Angeles County_The Factory_0057

CA_Los Angeles County_The Factory_0058

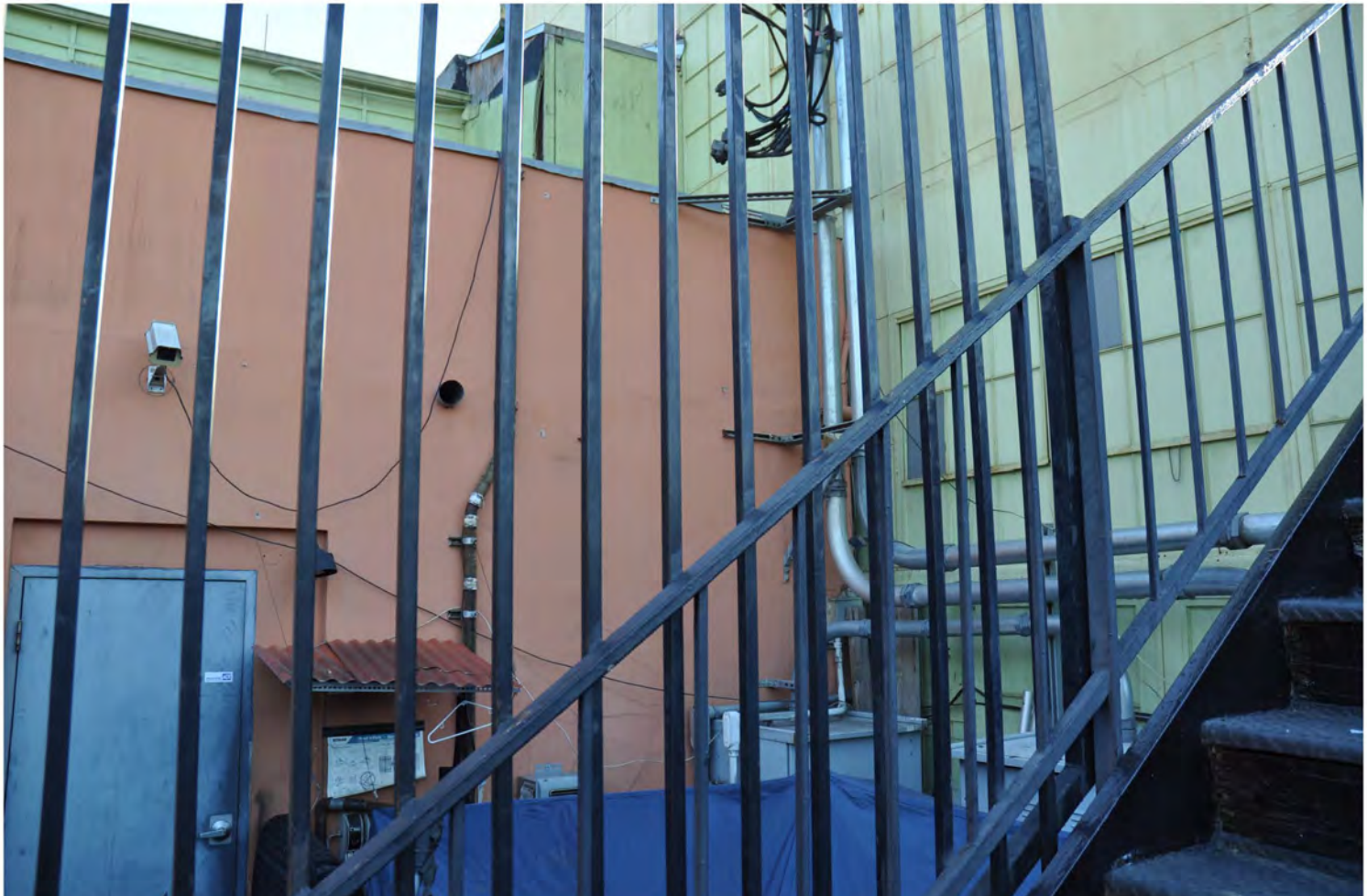

CA_Los Angeles County_The Factory_0059

National Register of Historic Places
Memo to File

Correspondence

The Correspondence consists of communications from (and possibly to) the nominating authority, notes from the staff of the National Register of Historic Places, and/or other material the National Register of Historic Places received associated with the property.
Correspondence may also include information from other sources, drafts of the nomination, letters of support or objection, memorandums, and ephemera which document the efforts to recognize the property.

OFFICE OF HISTORIC PRESERVATION
DEPARTMENT OF PARKS AND RECREATION
1725 23rd Street, Suite 100
SACRAMENTO, CA 95816-7100
(916) 445-7000 Fax: (916) 445-7053
calshpo@parks.ca.gov
www.ohp.parks.ca.gov

December 21, 2016

J. Paul Loether
Deputy Keeper and Chief, National Register and National Historic Landmark Program
National Register of Historic Places
National Park Service 2280
1201 I (Eye) Street, NW, 8th Floor
Washington, DC 20005

Subject: **Mitchell Camera Corporation Factory/Studio One**
West Hollywood, Los Angeles County, California
National Register of Historic Places

Dear Mr. Loether:

The enclosed disk contains the true and correct copy of the amendment to the nomination for the Mitchell Camera Corporation Factory/Studio One to the National Register of Historic Places. This property is located in West Hollywood, Los Angeles County, California. On October 28, 2016, the State Historical Resources Commission found the property eligible for the National Register under Criterion A at the local level of significance.

The property is nominated by a third party. The property owner has provided a notarized letter of objection. 73 letters of support and 12 letters of opposition, including two letters of objection from the property owner, were received, in addition to three letters of comment that were neither in support nor objection to the nomination.

If you have any questions regarding this nomination, please contact William Burg of my staff at 916-445-7004.

Sincerely,

Julianne Polanco
State Historic Preservation Officer

Enclosures

Table of Contents:
Correspondence_CA_Los Angeles_Mitchell Camera Corporation Factory_Studio One

Name of Commenter	Length	Page	Position
Table of Contents	3	1	
Office of Historic Preservation Staff Report	5	4	
Alice Huffman, NAACP	2	9	Comment
Rusty Areias, Request for Continuance	3	11	Comment
Wes Joe	17	14	Comment
Historic Resources Assessment; Margarita Wuellner-Jerabek	106	31	Oppose
ESA PCR October 2016	56	137	Oppose
ESA PCR Review Memo July 2016	8	193	Oppose
June 14 Letter of Objection: Nathan Goller	7	201	Oppose
October 13 Owner Letter of Objection: Nathan Goller	2	208	Oppose
Art Davis	4	210	Oppose
Don Kilhefner	7	214	Oppose
Jeffrey Apter	2	221	Oppose
Keith Kaplan	2	223	Oppose
Darin Weeks	1	225	Oppose
David Cooley	1	226	Oppose
Darren Gold	1	227	Oppose
West Hollywood Heritage (Nomination Applicant)	37	228	Support
Theresa Grimes	6	265	Support
Hollywood Heritage	2	271	Support
Joe Dunton July 15	2	273	Support
National Trust for Historic Preservation	2	275	Support
Andrew Atkin	1	277	Support
Carol DiPietro	1	278	Support
Joe Dunton October 25	1	279	Support
Mark Meinke	1	280	Support
Rainbow Heritage Network	1	281	Support
Mike Follen	3	282	Support
Elisabeth Sandberg	1	285	Support
Patsy Lynch	1	286	Support
James Rosen	1	287	Support
Teresa McGrath	1	288	Support
Lael M. Ward	1	289	Support
Christina Morris	1	290	Support
Stephanie J. Harker	1	291	Support
Simone Gad	1	292	Support
Steven Byrket	1	293	Support
Mary Mallory	1	294	Support

Cole Ettman	1	295	Support
Lloyd Coleman	1	296	Support
Peter Fields	1	297	Support
Robert F. Krumpholtz IV	1	298	Support
Amber Cannon	1	299	Support
Jeff Lambert	1	300	Support
Jeff Hiner	1	301	Support
John Vance	1	302	Support
James Waese	1	303	Support
Julian Davies	1	304	Support
Joe Dunton	1	305	Support
Karl Vangelisti	1	306	Support
Celeste Hong	1	307	Support
Andrea Bardack	2	308	Support
Justine Block	1	310	Support
Kris Hurst	1	311	Support
Scott Thomas	1	312	Support
Michael Q. Ceballos	1	313	Support
Carron V. Leon	1	314	Support
Catherine Rand	1	315	Support
Tony Villanueva	2	316	Support
West Hollywood Preservation Alliance	2	318	Support
Michael Haddad	2	320	Support
Carlos Healy	1	322	Support
Dottie Wine	1	323	Support
Daniel Schuster	1	324	Support
Brian Gleason	1	325	Support
Debbie Meister	1	326	Support
Kevin Burton	1	327	Support
Kate Wolf	1	328	Support
David McDermott	1	329	Support
Tim Perry	1	330	Support
Virginia Gillick	2	331	Support
Stephen Lewis	1	333	Support
Phillip Zonkel	1	334	Support
Sharon Sekhon	2	335	Support
David Raiklen	1	337	Support
Richard Schave	1	338	Support
Jack Wheeler	1	339	Support
Tony Randall	1	340	Support
Randy Doney	1	341	Support
Timothy Doherty	1	342	Support
Brooks Wachtel	2	343	Support
Deborah Jones	2	345	Support

Mark Bernardin	1	347	Support
Douglas Denoff	7	348	Support
Ron Hamill	2	355	Support
Gary Mortimer	2	357	Support
Paul Allen	1	359	Support
Kristeen Hernandez	2	360	Support
Sondra Martin	2	362	Support
Laura Boccaletti	2	364	Support
Anthony Randall	1	366	Support

Mitchell Camera Corporation Factory
West Hollywood, Los Angeles County, California
National Register of Historic Places

The Mitchell Camera Corporation Factory, also known as Studio One Disco and The Factory, is a reinforced concrete and steel industrial building located in West Hollywood, California. Built in 1929 by the Truscon Steel Company, the two-story industrial building is a daylight factory intended for the manufacture of motion picture cameras. The property was later utilized by a series of nightclubs, including Studio One and The Factory, pivotal locations in southern California LGBTQ history.

The main factory building is generally rectangular, with a monitor roof of low pitch. Walls are a combination of concrete block and stamped copper and steel panels, surrounding a steel building frame. Bands of metal sash windows are located on the first and second floors, with similar windows on the monitor roof. A northern wing duplicates the construction pattern of the main building, with its own roof monitor parallel to the main roof. A small office building is located to the northeast of the main factory building, originally a Zig-Zag Moderne building, re-clad in metal and a non-contributor to the site. The main building has lost some integrity of materials and design due to its multiple uses, including changing some of the sash windows on secondary facades to large picture windows, and alteration of the 1929 office building, now a non-contributor, but the building retains sufficient historic integrity for listing under Criterion A.

The building is nominated under Criterion A under two separate contexts: the building's role as the manufacturing facility for the Mitchell Camera Corporation, during the period 1924-1946, in the areas of Invention, Industry, Engineering, and Commerce, and its role in Los Angeles LGBTQ history in the areas of Social History, Entertainment/Recreation, and Performing Arts, for the period of 1974-1985.

The innovative Mitchell camera was developed during a period of transition from silent film to "talkies." Early motion picture cameras made so much noise their operation could be picked up by studio microphones. Other camera manufacturers covered their cameras with a bulky housing called a "blimp" to reduce noise, while Mitchell developed the NC, a camera with bakelite gears and minimal use of metal bearings to silence its operation. The nominated property was the production facility for the Mitchell NC camera, and a later improved model, the Mitchell BNC. During World War II, Mitchell developed cameras for use in surveillance aircraft, B-25 bombers, and were even used to film the world's first atomic bomb test as part of the Manhattan Project.

After the closure of Mitchell Camera as a manufacturing facility, the building became a private nightclub called “The Factory” in the mid-1960s, a preferred hangout of the Hollywood “Rat Pack.” In 1973, Beverly Hills optometrist Scott Forbes opened a Sunday night club at The Factory, called the Odyssey Club, with a target audience of gay men. When the Factory lost its celebrity membership, Forbes took over the building lease and launched Studio One as a full-time gay nightclub. Studio One was a nightclub significant in southern California during this era of transition. Prior to the era of Studio One, gay clubs were small, anonymous, dark, windowless spaces. Studio One was a huge, famous, first-class discotheque that rivaled all others of its region.

The period of significance is 1929-1985, including the period from the building’s construction and use as a factory to transitions in the LGBTQ community in response to the AIDS crisis. Because of the property’s pivotal role in Los Angeles LGBTQ culture, and the presence of existing scholarly evaluation of the events that took place at the nominated property under the historic context of gay rights in southern California, the property meets the requirements of Criteria Consideration G as an exceptionally significant property.

According to NPS Bulletin 15, Criteria Consideration G “safeguards against the listing of properties of passing contemporary interest.” A case can more readily be made for a property that has achieved significance within the past 50 years if the property type has been the object of scholarly evaluation. Within the context of LGBTQ rights in the 1970s and 1980s, recent scholarly evaluations of historic properties include the forthcoming National Park Service’s *LGBTQ America: A Theme Study of Lesbian, Gay, Bisexual, Transgender, and Queer History*, the end product of the NPS LGBTQ Heritage Initiative. At the local level, the SurveyLA LGBT Historic Context Statement was completed in April 2014. The level of scholarly evaluation available via academic history journals and the growing body of local and national LGBTQ historic context statements and theme studies suggest that the context of gay nightclubs as social gathering spaces in the 1970s and 1980s is not a passing contemporary interest but a rigorously documented field of academic study.

According to the National Register Bulletin dedicated to Criteria Consideration G, “exceptional importance does not necessarily mean national significance; rather, it is a measure of a property’s importance within the appropriate historic context, whether the geographic scale of that context is local, State, or national…For example, properties whose importance relates only to local mining activities need only be compared to others found in that locality to determine their comparative value.” Thus, comparison with sites of national significance, such as Stonewall, is not the appropriate way to evaluate a locally significant property for exceptional significance. On Page 11, the

same document states that the basis for exceptional significance should not be considered self-explanatory: “This justification must address two issues at the beginning of a nomination’s Statement of Significance. The first section should contain…a straightforward description of why the property is historically significant—with direct reference to the specific relevant National Register criteria…The second section should contain the justification as to why the property can be determined to be of exceptional importance. It must discuss the context used for evaluating the property. It must demonstrate that the context and the resources associated with it can be judged to be “historic.” It must document the existence of sufficient research or evidence to permit a dispassionate evaluation of the resource. Finally, it must use the background just presented to summarize the way in which the resource is **important.”** The nomination as revised addresses why the applicant considers the property exceptionally significant, and the bibliography includes references to the scholarly works cited to demonstrate the existence of sufficient scholarly evaluation.

Meeting the requirements of Criteria Consideration G does not imply a higher threshold of historic integrity than any other National Register eligible property of the same criteria and level of significance; it is the historic context that must meet the threshold of exceptional significance, not the level of historic integrity.

The nomination was submitted by a third party. The owner of the property has supplied a notarized letter of objection, along with a historic resource assessment by PCR Services stating that the property is not eligible for listing under any national, state or local criteria. The nomination has received 73 letters of support and 12 letters of objection, in addition to the two owner objection letters. Three letters of comment were received that did not take a position in support or opposition to the nomination; three addressed the issue of Studio One’s frequently discriminatory policy regarding admission of customers. This issue was addressed by the original nomination, and more detail was provided in the revised version. PCR Services also submitted a critique of the initial draft and subsequent draft of the nomination. This revised nomination provides rebuttal to the first PCR analysis. In addition to his letter of support, a second letter was received from Joe Dunton of Wilmington Camera, the current owner of the Mitchell Camera Corporation, whose letter stated that the design and manufacture of all Mitchell cameras from 1929 to 1946 was done in the main factory building, not in the administrative office.

PCR Services’ second analysis of the property claimed that the building does not retain any integrity due to loss of character defining features including alterations to the interior that changed the building’s internal appearance, and exterior features including the canopy entrance, signage, replacement of some windows, paint over original windows,

and new features including exterior staircases and a nearby wall. Per Bulletin 15, Page 45, a property must retain the key *exterior* materials dating from the period of its historic significance to retain integrity of materials. The exterior of the building has had some modification, but none represent large-scale alterations of the building's form. Bulletin 15, Page 47 specifies that a building covered with a non-historic material can still be eligible if the significant form, features, and detailing are not obscured. In the case of the main factory building, these details are visible, masked only by paint, which does not obscure form, features, and detailing.

The former office building on the site is covered by non-historic material that obscures its form and features, and is considered a non-contributor by the nomination due to loss of integrity of materials and design. The revised PCR report claims that the office building is where all research was performed, and thus that if the office building is ineligible due to loss of integrity, the property can no longer be associated with research that took place there. It should be noted that the previous PCR review claimed that the inventions associated with the Mitchell Camera site took place entirely off-site, and were not associated with the building complex at all, but no evidence is provided to explain their new conclusion that all research took place in the office building, rather than off-site or in the factory building. The nomination does not explicitly claim the building used for research or invention was one building or the other, stating that research and manufacturing took place on the property as a whole. As noted above, the current owner of Mitchell Camera has provided public comment claiming that research tasks were not performed in the administration building; they were done in the main factory building, during Mitchell's tenure with the company.

Both PCR analyses critique the property's eligibility in the area of invention, but the property's significance within the context of Mitchell Camera is not limited to invention. The other areas of significance, industry, engineering, and commerce, are also discussed in the nomination and expressed by the main factory building, which does retain sufficient integrity for listing under Criterion A. Generally, industrial facilities do not retain the machinery or factory equipment associated with the products they produced, and their retention is not required for the property to remain eligible under this context.

Bulletin 15, Page 47 encourages comparison to similar properties as a means of deciding what physical features are essential to the property type. The revised PCR report mentions several other clubs, including Rascals, the Blue Parrot, The Farm, Trunks, The Palms, Fourstar Saloon, The Hub, Bitter End West, Rage, Circus Disco and Catch One. None of these clubs were as long-lasting or as large as The Factory, few were gay owned, and many existed during different periods of time than The Factory. Thus, the comparative analysis provided by PCR highlights the significance of

Studio One, rather than diminishing it. The potential significance of these other clubs, within their own context, does not mean Studio One is not eligible.

The PCR analysis also falsely claims (on Page 6) that the nomination's argument for exceptional significance is based on its discriminatory door policy. This policy is mentioned in the nomination as part of the overall context, but it is *not* the basis for exceptional significance. The case for exceptional significance is based on the Factory's long-term success as a large, public, gay owned nightclub, during a key period in LGBTQ history, from the mid-1970s to the mid-1980s. The period of significance ends in 1985, when the building became the host of the first major, celebrity-endorsed AIDS benefit in the region, marking a transitional point to another era.

Staff supports the nomination as written and recommends that the State Historical Resources Commission support the determination that the Mitchell Camera Company Factory, also known as Studio One, is eligible under Criterion A in the areas of invention, industry, engineering, commerce, social history, entertainment/recreation, and performing arts, at the local level of significance, meeting the requirements of Criteria Consideration G, with a period of significance of 1929-1985, and should be determined eligible for listing in the National Register. Staff recommends the State Historic Preservation Officer approve the nomination for forwarding to the National Park Service for determination of eligibility for listing in the National Register of Historic Places.

William Burg
State Historian II
December 20, 2016

CALIFORNIA STATE CONFERENCE OF THE NATIONAL ASSOCIATION FOR THE ADVANCEMENT OF COLORED PEOPLE

ESQUIRE PLAZA, 1215 K STREET, SUITE 1609 • SACRAMENTO, CA 95814 • (916) 498-1898 • FAX (916) 498-1895

Alice A. Huffman
President

Gwen Moore
1st Vice President

Rick Callender
2nd Vice President

Paulette Simpson Gipson
3rd Vice President

Ida M. Johnson
Secretary

Olivia Verrett
Assistant Secretary

Carolyn Veal Hunter
Treasurer

Waudier Rucker-Huges
Area Director Southeast

Ronald Hasson
Area Director Southwest

Delois Edwards
Area Director North

LaJuana Bivens
Area Director Central

Dan Daniels, Sr.
Area Director Coastal

Freddye Davis
Area Director West

July 27, 2016

Julianne Polanco
State Historic Preservation Officer (SHPO)
State Historical Resources Commission
Office of Historic Preservation
1725 23rd Street, Suite 100
Sacramento, CA 95816

Re: Studio One/Mitchell Camera Factory Nomination to National Register of Historic Places

Dear Ms. Polanco and Commissioners,

Founded in 1909 in New York City by a group of black and white citizens committed to social justice, the National Association for the Advancement of Colored People (NAACP) is the nation's largest and strongest civil rights organization. Today the NAACP is a network of more than 2,200 affiliates covering all 50 states, the District of Columbia, Japan and Germany. The NAACP's principal objective is to ensure the political, educational, social and economic equality of minority citizens of the United States and eliminate racial prejudice. The NAACP seeks to remove all barriers of racial discrimination through democratic processes. From school desegregation, fair housing, employment and voter registration, top health and equal economic opportunity, the NAACP is working to establish legal precedents in order to improve the quality of life of America's downtrodden.

It has recently come to our attention that the Studio One Nightclub, operated at 665 N Robertson Boulevard, instituted racial and sexist exclusionary policies to prevent attendance by African Americans, Latinos, women, and other minorities. These policies included unreasonable identification rules, racial quotas, and potentially other hateful acts. While the Studio One nightclub may have been an early gathering place for the Gay Community in Los Angeles, its legacy as a discriminatory businesses needs to be investigated further before an informed decision can be made on its place on the National Register of Historic Places.

As an advocate against racial discrimination, we are concerned with the potential preservation of racially exclusionary businesses. In light of these recently uncovered policies, in order to make a better informed decision on the historical significance of the Studio One Nightclub, we respectfully ask the commission to continue this agenda item

until the next Commission Meeting, on October 28,2016 to allow the California State Conference NAACP in conjunction with the Beverly Hills Hollywood NAACP further time to investigate these troubling accusations. Thank you for your consideration.

Sincerely,

Alice A. Huffman
President
California NAACP
AAH/da

Ron Hasson
President
Beverly Hills Hollywood NAACP

CALIFORNIA STRATEGIES, LLC

July 27, 2016

Ms. Julianne Polanco
State Historic Preservation Officer
Office of Historic Preservation
1725 23rd Street, Suite 100
Sacramento, CA 95816-7100

State Historical Resources Commission
P.O. Box 942896
Sacramento, CA 94296-0001

Re: Request for Continuance: July 29 Agenda Item XI.A.3 (Mitchell Camera Corporation/Studio One)

Dear Ms. Polanco and Honorable Commissioners:

On behalf of the ownership of the Factory Building located at 661-665 Robertson Boulevard and 648-652 North La Peer Drive in West Hollywood, California (Property), we are writing to request a minimum 90-day continuance for Item XI.A.3 on the Commission's July 29, 2016, agenda. Specifically, there is significant new information concerning the Property that will affect the Commission's consideration of the pending nomination to include the Property on the National Register of Historic Places. We believe that additional time is necessary for your staff to analyze this new information so that a complete and accurate account of the Property and the issues affecting it can be presented to the Commission before any action is taken.

Below we have summarized the areas of new information requiring further consideration and analysis by Commission staff. We would gladly provide you with additional information and documentation concerning each of these issues upon request.

1. Exclusionary Practices at Studio One: While the pending nomination argues that Studio One is eligible under Criterion A due to its association with LGBTQ civil rights, the nomination ignores the fact that exclusionary practices that occurred at Studio One ran counter to the broad goals of the LGBTQ civil rights movement. There is significant evidence that Studio One excluded both non-whites and women from admission, and that Studio One's owner Scott Forbes publicly supported these discriminatory practices noting that he needed to keep out "the bad element." (See *Gay L.A.: History of Sexual Outlaws, Power Politics, and Lipstick Lesbians*, by Lillian Faderman and Stuart Timmons (pages 234-237), available at: https://books.google.com/books?id=I5SVsJmVxDUC&printsec=frontcover&source=gbs_ge_summary_r&cad=0#v=onepage&q&f=false.)

U.S. BANK PLAZA
980 NINTH STREET, SUITE 2000 • SACRAMENTO, CA 95814
TELEPHONE (916) 266-4575 • FACSIMILE (916) 266-4580

The pending nomination fails to analyze the substantial information provided in *Gay L.A.*, including the numerous news articles it cites from the 1970s, and fails to reconcile how such discriminatory practices are consistent with the LGBTQ civil rights movement. In light of this lack of detail, Item XI.A.3 should be continued to provide Commission staff the opportunity to further investigate the discriminatory acts that occurred at Studio One. We believe that the Commission should be very concerned about nominating a building to the National Register based on its association with a business that was engaged in racially and sexist discriminatory acts under the claim that such a business was important for the furtherance of "civil rights." In sharp contrast to Studio One, the Stonewall Inn in New York (which was listed on the National Register) was added specifically because that business and the events that occurred there actually advanced the LGBTQ civil rights movement. The evidence shows that is not the case here.

2. West Hollywood Commercial Historic Resources Survey: The City of West Hollywood is in the process of preparing a Commercial Historic Resources Survey evaluating the historic significance of commercial properties throughout the City, including the Factory Building. The City retained Teresa Grimes of Galvin Preservation Associates to prepare the survey, and recently released a draft Historic Context Statement along with draft Status Code recommendations for certain properties that indicate whether the City believes a property is local register, California Register or National Register eligible. The draft survey currently identifies the Factory Building as Status Code 3CS – California Register eligible. (Please see survey page 82, attached hereto.) The City's initial determination that the Factory Building is California Register eligible – as opposed to National Register eligible – is in direct conflict with the pending nomination before the Commission.

   It is critically important for the Commission to take the City's independent analysis of properties within its borders into consideration, including the underlying rationale in that analysis, before taking any action on the Factory Building. The City's independent analysis will provide another important professional view of the Property's eligibility for the Commission's consideration. The City is currently scheduled to release its final draft of the survey in August 2016, and the survey is scheduled to be considered by the City Council in September 2016. At a minimum, we request that the Commission continue its consideration of the Factory Building until after the final draft survey is released.

3. Additional Information re Lack of Integrity: On July 15, 2016, ESA PCR submitted substantial additional new information to the Commission concerning the Factory Building's lack of integrity. The pending nomination of the Factory Building is wholly lacking in information on the Factory Building's integrity. In order for the Commission to make a

reasoned and informed decision on the Factory Building's National Register eligibility, we believe it is critical for Commission staff to analyze the new integrity information submitted by ESA PCR and to provide its assessment of these issues in a supplemental staff report for review and consideration by the public and the Commission. In order to provide additional time for Commission staff to complete this analysis, we believe a minimum 60-day continuance is warranted.

4. New Information re Preservation of the Factory Building: On July 14, 2016, a local developer seeking to develop the Property announced that it will rehabilitate and incorporate a significant portion of the Factory Building into a new mixed-use hotel project to be developed on the Property. The proposed preservation project has received the support of both the Los Angeles Conservancy and the West Hollywood Preservation Alliance, and has been lauded in the local media (see: http://www.wehoville.com/2016/07/14/faring-capital-restore-factory/). We believe it is important for the Commission to understand the scope of the pending project, as well as the developer's substantial efforts to retain and restore the Factory Building, before taking action on the pending nomination.

We appreciate your consideration of these issues and again respectfully request that the Commission continue Item XI.A.3 for at least 90 days so that the Commission and its staff may consider this substantial new information.

Sincerely,

Rusty Areias
Principal
California Strategies
916-266-4575

June 21, 2016

California State Historic Resources Commission
P.O. Box 942896
Sacramento, CA 94296-0001

By Mail and Email

Re: **Mitchell Camera Corp/Studio One/The Factory**
665 N. Robertson Blvd & 652 N. La Peer Drive, West Hollywood

Dear Commissioners:

Thank you for the opportunity to provide comments regarding the nomination of this site for listing on the National Register. There are many layers of history here. This letter concerns the Studio One discotheque, which operated from 1974 until 1993.

INTRODUCTION

There's no question that Studio One played a prominent role in the social history of the LGBT community in West Hollywood. This is amply documented in the nomination application. The disco was a cultural trendsetter, broke social barriers and served as a much-needed fundraising platform – both for the nascent LGBT movement and for the fight against AIDS.

But over the course of the last year it's been unsettling to hear the potential listing of the disco site framed unapologetically in terms of an advance for diversity. Studio One was a race- and gender-separated work- and social-space. And this segregation was not simply accepted – it met resistance over a period of over ten years, during which women and LGBT people of color developed their own social spaces.

The application material mentions the admission policy at Studio One, but not in much depth. The names and voices of persons of color are largely absent. And the alternatives to Studio One (that arrived earlier, became larger, and lasted longer) are ignored. The very significant step taken by the new City of West Hollywood in 1985 is ignored. What follows is an attempt to fill in a bit more of the story. To make it clear, it is not being offered in support or opposition of the application, but in the hope that the narrative becomes more complete.

Integration, exclusion, separation and regulation – a few of the behaviors associated with diversity. Studio One was not an integrated environment, but its history can be looked at from the perspective of the latter three strategies.

EXCLUSION

Studio One opened in 1974 in West Hollywood, then an unincorporated area within the County of Los Angeles. For context, the previous year voters in the City of Los Angeles had elected Tom Bradley, an African-American man, as mayor.

As noted in the nomination material, Scott Forbes, the owner, "insisted on having strict rules at the door. Reportedly, to keep out non-white men, he asked the door people to ask for three IDs from African-Americans, Latinos and even then they were denied entrance. It was said that the over 100 employees who worked at Studio One and the Backlot were all white men." (App 49) "Women too were denied entrance. Studio One did this by enforcing their no-open-toe shoes policy, which they said was for insurance reasons." (App 49)

Mark Haile, a writer for BLK, a gay African-American magazine, recounted a local rite of passage in Gay L.A.. Young men would go to Studio One with three pieces of identification "so they could say they got in the door." (GLA 236) And once inside, "Bobby Smith, a black gay activist, would remember spending ten minutes waving for the bartender's attention as the white men around him collected their drinks." (Clendinen 495)

Dave Johnson was a leader of the Gay Community Mobilization Committee ("GCMC").[1] In June 1975 the Los Angeles Free Press published his article, "Studio One hit with charges of racism, sexist discrimination." In his personal observations of the club's door policy, Johnson noted that on a Sunday night between 10:30pm and 10:55pm, "less than half the women, blacks, Asians and Latinos who came to the door were admitted, and every one of them was asked for I.D., regardless of age." During an observation period an hour later, "not one minority person gained admittance." (LAFP, Attachment 1)

The group began investigating allegations of discrimination at Studio One in January 1975. Management was asked to end its exclusionary policies. When there was no response, GCMC began a boycott on March 8, 1975. (Attachment 2) Leaflets were distributed in English and Spanish. (Attachment 3)

[1] Besides his involvement in the boycott, Dave was a coordinator of the Gay Student Union at UCLA and an early employee of the Gay Center. He was the first Executive Director of Being Alive/People with AIDS Coalition. Dave was the son of Russell Johnson, who played "The Professor" on "Gilligan's Island." He was named the City of L.A.'s first AIDS Coordinator in 1990 and helped draft an approach to AIDS that became a national model. (ACO) Dave passed away in 1994 at Chris Brownlie Hospice.

There was an attempt to involve the local congregation of the Metropolitan Community Church. (MCC, founded in 1968, was described in 2006 as "perhaps the largest gay institution in the world." (GLA260)) Per Johnson, leaders of the local MCC decided not to go along with the boycott, which was subsequently denounced from the pulpit. (LAFP, Attachment 2)

Scott Forbes met with the GCMC on April 18, 1975 and agreed to their requests. (LAFP, Attachment 1) He subsequently reneged, as evidenced by a Los Angeles Times article the next year (LAT). The GCMC attempted to re-start the boycott, and distributed a leaflet to attendees of the Gay Pride march. This effort was unsuccessful. Carson Anderson[2] was on the steering committee of the Association of Black Gays, an organization that was active from 1975 to 1980. He mentions the carding policy at Studio One as a focus of that group's activities. (CA)

Faderman and Timmons cite Scott Forbes' activism – writing checks to LGBT charities, providing meeting space for organizations, and the purchase of advertising space in the gay media – to explain the lack of support. (GLA 237) And as noted below, women and men of color had friendlier spaces to go.

Studio One was not unique in its admission policy.[3] Faderman and Timmons mention that one local discotheque required five pieces of identification from women (GLA 236). Black and White Men Together ("BWMT") was founded in San Francisco in 1980 (Frontiers). One of the organization's early actions involved a nearly yearlong boycott of the Ice Palace 57 disco in New York City. After a carefully coordinated sting, four of its members were actually able to bring legal action against the club based on discriminatory admissions. In 1982 they won $6,000 in punitive damages (Clendinen 495) – probably a good fraction of one night's proceeds.

Discriminatory policies continued – at the Ice Palace, at Studio, at businesses across the country. But as time went by, there were more and more welcoming spaces.

SEPARATION

During the 1950's UCLA psychologist Evelyn Hooker conducted groundbreaking research into the lives of gay men. Dr. Hooker wrote eloquently on the subculture of the gay bar. She noted its central role within an otherwise hostile and dangerous environment. The bar was a place where "the protective mask of the day may be dropped." (Hooker)

Years later, discos such as Studio One provided much more. They came after Stonewall, in June 1969. Public outcry and the new LGBT movement had ended the most abusive police raids.

[2] Anderson went on to work in the field of historic preservation for the City's Redevelopment Agency and Jones & Stokes. He is listed on the front cover of the City's LGBT Historic Context Statement as a contributor

[3] The carding policy is examined by Wat in "Three Pieces of ID," in The Making of a Gay Asian Community: An Oral History of Pre-AIDS Los Angeles, Rowman & Littlefield, 2002, pp. 55-58

The discos were large, open gathering places which offered a hopeful and joyous version of community within the context of a larger society that was opening up to LGBT people.

It's unfortunate that the policies at Studio One did not allow for a sharing of the celebration. But Los Angeles is a bigger and more diverse city than most. So it's not surprising that the critical mass existed for a variety of groups to form their own Studio Ones (or perhaps the more correct term is their own "Catch Ones.")

Women and gay men of color were certainly exposed to the "push" of Studio One's admission policies, but they also experienced the "pull" of familiarity – attraction to clubs where they could relax together with others who shared similar social and cultural experiences.

Jewel Thais-Williams started Catch One in 1973, the year prior to Studio One's opening. Catch was on Pico Boulevard and has been described as the first disco in the country to serve a predominately African-American LGBT clientele. It was a place to relax, meet friends and have fun. And much as Studio One occupied a place in the center of the West Hollywood community, Jewel's was a focal point for the black LGBT community. It was a meeting place for organizations, a fundraising venue and a trendsetter. When Jesse Jackson addressed a crowd there in 1988, it was the first time a major party presidential candidate had spoken before a black gay audience. (GLA 287) Jewel's closed in 2015.

The local Asian-Pacific LGBT community was comparatively smaller in the 1980s but still incredibly diverse. There was no gathering place on the order of Catch or Studio One. But Mugi's Bar on Hollywood Boulevard and Faces on Santa Monica in East Hollywood both had small dance floors. These bars provided the focus for the formation of Asian Pacific Lesbians and Gays in the early 1980s ("APLG"). (GLA 287)

Faderman and Timmons note that Lesbian bars proliferated during the late 1970s, and that by 1983 there were more than forty in the L.A. area. There was an entire feminist/Lesbian scene, which included bookstores such as A Different Light and Sisterhood; periodicals such as "Lesbian Tide" and "Sister;" and community institutions such as the short-lived Women's Center on Crenshaw and the Woman's Building on North Spring. Prominent leisure-time locales included the Palms Bar[4] on Santa Monica near LaCienega and Peanuts disco on the east side of West Hollywood. (GLA 245-247)

[4] The year the Palms was founded is unclear. Upon closure in 2013 accounts say it had been open almost 50 years.

The biggest and most direct response to Studio One was Circus Disco. This renowned Hispanic hangout was founded in Hollywood in 1975 by Gene LaPietra. He has specifically stated that he started Circus so that his gay non-white friends would have a place to go. (GLA 288) Charles Stewart of BWMT has noted that at some point it didn't make sense to go to West Hollywood, stand in line for half an hour, and then potentially not be admitted to Studio One. (CBS-IV) It was a lot easier to just go to Circus. Circus employed state of the art entertainment technology and eventually surpassed Studio One in capacity (with floor space for 3,000). (GLA 288) It served as a community focus and stayed in operation until January of this year.

With one exception, none of the above clubs has been noted as having had an exclusionary policy. At Catch One, Haile noted that whites were tolerated as long as they respected where they were. (GLA 288) There are anecdotal accounts (semi-anonymous comments on the internet) that The Palms was at times woman-only.

Somewhat ironically, during the 1960s the bars in West Hollywood were more racially mixed. Tak Yamamoto, a founder of APLG, notes that at that time the club owners needed all the business they could get. (GLA 236)

Scott Forbes was pretty much made an instant millionaire as a result of his skill in operating Studio One. (GLA 235) He's been widely quoted describing his admission policy as just a marketing tool – "Let's face it, every club has a door policy and a different way of catering to the kind of crowd it wants. Customers don't come for the drinks or the décor. They come for the clientele. It's like casting." (Clendinen 495) Per a number of anecdotes he harbored no personal racial animus.[5]

Exclusion and separation – is there really such a distinct line? It boils down to whether or not there was a formally enforced rule barring the presence of "others." For Studio One, the record clearly indicates that there was. Beyond this, perhaps it's worth considering whether the separation either reinforced a social fault line (racial or ethnic) or perhaps was a reaction to one -- some feminists have explained separatist woman-oriented spaces as a logical reaction to patriarchy.

Within the local constellation of shimmering disco balls, Studio One was not the first, the largest nor the one to last the longest -- though it was the most exclusive. And for a time its star had arguably shown brightest. The place is still warmly regarded by former patrons, as are the other clubs.

[5] In its early years the main DJ for Studio One was Manny Slali, of Arab-Mexican descent. (GLA 398, footnote #17)

REGULATION

In November 1984 voters in West Hollywood approved cityhood. A victory for both LGBT organizers and those frustrated with the County's reluctance to enact rent control. Cityhood triggered a State requirement. For 90 days the new municipality could operate on an interim basis, under existing County Codes. By the end of the period the new City Council was required to enact a Municipal Code. An incredible task for a group that was starting with no employees, no office space and with many eyes – hopeful and scornful – watching. (WH Minutes)

Looking through the minutes of the first hectic months, the City Council meetings were intense, long, and frequent. But to their credit, Councilmembers took the time to deal with an issue raised by the local BWMT chapter. Charles Stewart[6] was one of BWMT's first national co-chairs. He and other group members hammered out an ordinance with the Council. There was a model – a law passed in Atlanta – but what was to come out of West Hollywood was more stringent. (Frontiers)

The proposed ordinance banned requiring more than one form of identification. And included a provision "Proof of Age – Displaying the Rule." Affected businesses were required to post the following verbatim:

> **PROOF OF AGE REQUIREMENT**
>
> No business establishment shall require more than one unexpired picture identification issued by any agency of the government which has the holder's name and date of birth attached. A business establishment may request more than one identification if no valid picture identification is presented.
>
> If you believe that this law has been violated, call or write the West Hollywood City Hall, 8300 Santa Monica Blvd., West Hollywood, California 90069. (323) 854-7400.

There are also sections on "Uniform Treatment" and "Discrimination on the Basis of Dress."

The Item "Identification Procedures" is on the agenda of the Council's meeting of February 7, 1985. (Verbatim minutes were not taken. Attachment 4 contains the relevant paragraphs from the summary minutes.) The City Attorney explained the ordinance. Two persons spoke in opposition – Jerry Hyde, the manager of Rage; and Scott Forbes (of 652 North La Peer). Four persons, including Stewart, spoke in initial support.

---

[6] Out for Good gives an account of Stewart's effort to join the local "A-List" Lesbian and Gay lobbying group MECLA – he was told he lacked the ability to bring sufficient donations to the table. (Clendinen 496) Stewart is currently Director of Communications for State Senator Holly Mitchell.

During public debate an additional six persons [7] spoke in support. Councilmember John Heilman moved to adopt. Mayor Valerie Terrigno proposed an amendment to discourage discrimination against cross-dressing persons. Heilman accepted and the Council approved adoption unanimously. These provisions became part of the original West Hollywood Municipal Code and remain in force today. (Attachment 5)

Was the ordinance effective? Hard to gauge, in short order AIDS became the overwhelming issue within the LGBT community. But given previous disinterest, this action has a redemptive quality.

CONCLUSION

It's worth noting that the disco occupied the structure for a relatively small span of years. And the prior uses appear compelling -- the camera factory building survives as the largest remnant of West Hollywood's industrial origin; and the Factory's 1964 conversion of the building from industrial to entertainment is the type of change that still makes news today.

But the application material emphasizes the presence of the disco. And the honor that is being proposed is significant. As such, it's important that the narrative be as complete as possible. It should acknowledge that within the social history of this site there was a struggle over diversity. Hopefully that gives us one more way to understand how we got here, and maybe where we're going

Thank you,

Wes Joe
932 Maltman Ave, Los Angeles 90026

- Personal Background Note p. 8
- Attachments pp. 9-16
- References p. 17

[7] Among the six were long-time local activist John O'Brien and Latino activist & New Mexican Santero artist Arturo Rivas. Also Sallie Fiske, a journalist and television host who lost her long-time talk show after coming out while on the air to announce her honest reaction to Anita Bryant's anti-LGBT efforts.

Personal Background Note

I'm a native of Los Angles. Over the years I've developed some knowledge with respect to both local LGBT historic sites and the workings of historic designation and commemoration.

In 2008 I initiated the historic designation of the Black Cat Bar in Silver Lake, preparing the report on historic significance. The bar was designated a Historic Cultural Monument by the City of Los Angeles in November of that year (ironically just a few days after the passage of Proposition 8). This is the first site in the City to be designated an HCM based on a connection to LGBT history.

In 2011 and 2012 I led the effort to officially rename the public staircase adjoining Harry Hay's residence on Cove Avenue in Silver Lake "The Mattachine Steps." On November 11, 1950 Hay met with a small group on this hillside to form what in a few months would become the Mattachine Society. Mattachine was the first sustained organization in this country to raise the issue of equal rights for LGBT persons. We were lucky enough to unveil the Steps signage on April 7, 2012, the centenary of Hay's birth.

During 2014 I was involved with the GPA Consulting's preparation of the City of L.A.'s LGBT Historic Context statement. Together with Carson Anderson I'm listed as one of the two community contributors on the cover page of this document, which was released in September 2014.

LIST OF ATTACHMENTS

Attachment 1: **Los Angeles Free Press article**
(from the ONE Archives Dave Johnson collection – see References for full citation)

Attachment 2: **Gay Community Mobilization Committee Leaflet**
(provides a chronology of actions, From the Dave Johnson Collection)

Attachment 3: **GCMC Boycott Leaflet**
(from the Dave Johnson Collection)

Attachment 4: **West Hollywood City Council Minutes (in part)**
February 7, 1985
(from the West Hollywood City Clerk's office)

Attachment 5: **West Hollywood Municipal Code**
"Identification Procedures"
(from the internet)

Attachment 1

Los Angeles Free Press, June 13-19, 1975

Volume 12, No 23 (569), June 13-19, 1975

Studio One hit with charges of racism, sexist discrimination

DAVE JOHNSON

Racial and sexual discrimination in gay bars is nothing new. Selective enforcement of ID policies has been used for years to exclude women and third-world people from bars whose owners seek to maintain an "upper-class" white male image.

One such bar is Studio One, which is among L.A.'s more heavily frequented gay establishments. Complaints from within the gay community, charging exclusion of groups of women and minority people at Studio One, have been numerous. Many have also suggested that the bar, in fact, has a quota system by which a few women and third-world people are let in early, while almost none are admitted once the bar is full.

In response to these allegations, I went to Studio One on a recent Sunday night. I observed the door from a distance at first, interviewing at length anyone who was turned away.

3 Pieces of ID

From 10:30 p.m. to 10:55 p.m., less than half the women, blacks, Asians and Latinos who came to the door were admitted, and everyone of them was asked for ID, regardless of age. One woman who tried to enter told me, "I'm 40 years old and they asked me for three pieces of ID. I've never heard of anything like this."

(The Alcoholic Beverage Commission requires that patrons produce only one piece of government-issued ID, such as a driver's license, and then only as proof of age, for admission to a bar.)

A man who had been turned away when he tried to enter with a woman returned to the door alone a few minutes later and was allowed in immediately. White males were continuously motioned along as others were delayed at the door. One bystander, observing the activity, asked me, "Is this a private club? They seem to be asking for some kind of membership card."

I returned an hour later to see whether the pattern was consistent and to check out the quota charge. Eight white men passed the door without incident. A black man and woman were asked for extra ID and turned away. Three more white men were whisked by the door.

Final Decision

Three black men then approached and ID was demanded. When the ID they produced did not satisfy the bookkeeper, the men quietly demanded to see the manager, and I approached the door directly to observe the incident firsthand.

The woman at the door replied that she was the manager (the bar is in fact managed by a man named Scott Forbes), that the decision [illegible] being especially careful about ID because it had been harassed by the Alcoholic Beverage Commission (which manager Forbes, in a later interview, said they have not).

During this later observation period, not one minority person gained admittance, lending credence to the charge of a quota system. The few women who entered were all well dressed and in every case accompanied by well-dressed white men. Over a period of 45 minutes I recorded 35 specific instances of women and minority people turned away for insufficient ID. By contrast, in the same period I could not find one white male group similarly excluded.

The Gay Community Mobilization Committee, a recently formed coalition of gay groups and individuals, attempted to halt these practices at Studio One by at first sending Forbes a letter of protest. Receiving no response, they launched a community-wide boycott of the bar.

They set up picket lines and leafleted potential patrons, stating three demands: 1) that Forbes remove a sign from the door asking for three pieces of ID and establish and post one universal ID policy for all patrons; 2) that he agree to

(please turn to page 33)

STUDIO ONE CHARGES

(continued from page 9)

monitoring of the door by an observer from the community, and 3) that a phone number be posted at the door for use by persons feeling that they have been discriminated against.

On April 18, as the boycott began to gain momentum — with several gay student groups preparing to join the picket line the following night — Forbes went to a meeting of the GCMC and appeared to agree, in principle, to the demands. As a result, the boycott and pickets were called off.

Negotiations Break Down

Later, however, Forbes reneged. Negotiations over an acceptable observer for the door and a phone number for posting broke down. Forbes angrily claimed that he already had one universal ID policy. In light of my own investigation one week later, he is apparently "unaware" of the actions of his doorkeepers. In either case, Forbes now refuses to deal further with GCMC, calling them "destructive publicity-seekers."

GCMC has announced that the boycott will now be reinstated and will continue until the demands are actually implemented.

They also blame the failure of negotiations with Forbes on the puzzling lack of support the boycott has received from established gay groups. Metropolitan Community Church, long noted for political activism, refused to endorse the action, stating that they had been able to find no evidence of discrimination at Studio One. Rev. James Sandmire, pastor of MCC's local church, eventually denounced the entire boycott action from his pulpit and in two separate heated exchanges with GCMC by letter.

Ideological Group

He termed GCMC "a small and largely anonymous group which represents the ideological group of the extreme left." In a later interview Sandmire clarified this statement — and shed some light on the split — by saying that his concern sprang from the active participation in GCMC of the Lavender and Red Union, a group of gay Communists.

"We are witnessing an [illegible] liberation the rise of certain ideological groups on the left and right, action in my view are not for gay liberation except in the context of their own brand of social revolution . . . They view any destruction as justified even of gay sisters and brothers," he explained.

It would appear that this feeling, in MCC and elsewhere, may have caused some initial mistrust of GCMC's charges. In addition, Forbes is on very friendly terms with much of the gay establishment and has donated space and money to several groups, among them MCC. No one has suggested that this is why MCC refused to boycott the bar, but it may have made gay leaders more inclined to trust Forbes.

All the gay leaders with whom I spoke, however, stated a willingness to participate in the boycott, regardless of who else was involved, if only specific evidence of discrimination were presented. Perhaps in the light of the facts presented here, the intracommunity struggle will lessen. But up to now, communication on all sides has been filled with rhetoric and innuendo.

Most of the gay media, heavily dependent on Studio One for advertising, will not give the story coverage. And the real problem — the racist and sexist policies of Studio One — continues.

(Dave Johnson has served as coordinator of UCLA's Gay Students Union, during which time he wrote for the UCLA Daily Bruin. He has also worked for the Gay Community Services Center.)

Attachment 2

GCMC Informational Leaflet

GAY COMMUNITY MOBILIZATION COMMITTEE

AN OPEN LETTER

Dear Rev. Sandmire, Rev. Sirico, and Frank Zerelli,

The following is a chronology of events in the recent successful boycott campaign against Studio One, combatting its racist and sexist admission policies, conducted by the Gay Community Mobilization Committee.

---- First week of January - Investigation of admission policies of gay bars. Found pattern of racist and sexist discrimination at Studio One.

---- End of January - Sent letter to Studio One asking for change of policy; decision to boycott if no response is received.

---- Beginning of February - After receiving no response from Studio One, decided collectively to distribute leaflets at the bar calling for boycott.

---- March 8 - Boycott begins. Followed later by decision to picket.

---- March 28 - April 11 - Contacted MCC many times to elicit their support. Received no response.

---- April 11 - We sent telegram - an urgent appeal to the church to meet with us to discuss boycott. Response was to demand that any meeting include the owners of Studio One, although we still had not been contacted by Studio One directly.

---- April 13 - Rev. Sandmire denounces boycott from the pulpit of MCC.

---- April 18 - Scott Forbes, owner of Studio One, attends GCMC meeting. Agrees to meet demands.

We feel that your actions (Rev. Sandmire, Rev. Sirico, and Frank Zerelli) bring discredit to the Church and to MCC's long tradition of community involvement.

Rev. Sandmire never attempted to meet with this committee to discuss the boycott and our reasons for taking such action. When you were willing to meet with us you pulled a shabby piece of grandstanding. Rather than sitting down with us directly, you appointed yourselves arbitrators at no ones request. Then at a meeting on the street in front of Studio One - a meeting for which GCMC had not been given adequate notice - Rev. Sirico approached us with a hostile attitude. "Interrogating" one of our members, Rev. Sirico exhibited blatant racism.

In general, you took the bar's word at face value, while requiring GCMC to produce volumes of "concrete" evidence. The Church's search for evidence began only one week before the first scheduled picketing, after the bar had already shown signs of changing its policy under pressure.

Rev. Sirico said that MCC did an investigation of Studio One (nominal), and found no evidence of racist or sexist discrimination. As inadequate as their investigation of the bar was, their investigation of GCMC was even more pathetic - to the point of not knowing the name of our committee correctly when they made their denunciation.

This committee has been referred to as a front group for the Lavender and Red Union, and as an "ideological group of the extreme left," both of which are totally inaccurate. GCMC is a coalition of groups and individuals, of which the L & RU is but one. Scurrilous "red-baiting" as spoken from the pulpit of MCC will not succeed in dividing GCMC.

We see the outcome of the boycott as a victory for gay people over a time-honored tradition of discrimination in our bars. We regret that some of the leadership of MCC actively worked to prevent such from happening.

In the bonds of Gay Liberation,

Gay Community Mobilization Committee

Attachment 3

Boycott Leaflet (Spanish)

A BOYCOTEAR STUDIO ONE !

Studio One es el bar para homosexuales mas grande y popular en Los Angeles.

Studio One ha discriminado consistentemente contra Negros, Latinos, y mujeres. Los dueños no practican esta discriminación en forma abierta, no dejando a estos grupos entrar a el bar, sino practican un método mas sutil. Requieren de Negros, Latinos y mujeres tres tipos diferentes de identificación mientras los hombres anglos entran sin mostrar identificación alguna.

No es que Studio One sea el único que siga esta política sino es el mas grande y el que la practica en forma mas insistente.

Mentiríamos si dijeramos que los dueños de Studio One son nuestros hermanas o hermanos; ellos son explotadores que lucran a costa de nuestra communidad. Una victoria contra la politica discriminatoria racista y sexista de Studio One sentaría un precedente dentro de la comunidad homosexual.

¿Porque Boycotear Studio One?

Como resultado del clima anti-homosexual de nuestra sociedad, hay pocas instituciones que satisfagan nuestras necesidades. Vamos a estos bares a bailar y a escapar de este clima, compartiendo con nuestros hermanas y hermanos. Pero no vamos a ellos para sufrir mas opresión de la que ya existe. Esta discriminación contra Negros, Latinos y mujeres homosexuales se añade a la que ya existe dentro de nuestra sociedad.

La razón por la cual Studio One y otros bares practican esta discriminación es para reproducir en ellos un cierto ambiente - hombre anglo. Quitémosele la base de lucro al racismo y sexismo. No dejemos que las practicas discriminatorias sigan siendo lucrativas. A boycotear Studio One.

El comite de Movilización de la Comunidad Homosexual es una coalición de grupos e individuos envueltos en una acción inmediata. Si Ud. tiene deseos de trabajar en el boycott, o, plegarse a el comité, póngase en contacto con GCMC - 876-6099.

Exigimos:

1) Que Studio One suspenda esta discriminacion en forma inmediata y que establezca <u>un solo criterio</u> para la admisión de todo el mundo.

2) El derecho a estacionar en la puerta de entrada a uno de nuestros representantes que garantice el derecho de admisión a todo el mundo independendiente de raza y sexo.

3) La puesta de un letrero en la puerta de entrada que diga que la persona que se sienta discriminada, llame a el GCMC.

Attachment 4

West Hollywood City Council Minutes, 2/7/1985, pages 1, 4, 5

MINUTES.
WEST HOLLYWOOD CITY COUNCIL
FEBRUARY 7, 1985

CALL TO ORDER

The meeting was called to order at 7:12 p.m. by Mayor Terrigno at West Hollywood Park.

ROLL CALL

The City Manager called the roll.

Present: Councilmembers Albert, Heilman, Schulte, Viterbi; Mayor Terrigno

Absent: None

Also Present: City Manager Bien
City Attorney Jenkins

APPROVAL OF AGENDA

Mr. Viterbi moved to add distribution of cheese in the City and discussion of merchandise displays. The City Manager deleted Item No. 10. Mr. Heilman moved to approve the agenda with the above additions. Ms. Albert seconded. The agenda was approved unanimously.

APPROVAL OF MINUTES, JANUARY 3, 1985

Mr. Heilman moved to include the verbatim transcript for page 3 under "Public Hearing." Mayor Terrigno moved to adopt the minutes with this revision. Mr. Heilman seconded. The minutes were approved unanimously.

TREASURER'S REPORT BY JONATHAN AHEARN

The report was presented with discussion of general funds and street improvement funds. Mr. Ahearn will make a report monthly. The sewer study money was discussed. Mr. Schulte moved adoption of the Treasurer's report. Mr. Viterbi seconded. The Treasurer's report was approved unanimously.

UNFINISHED BUSINESS - DOMESTIC PARTNERSHIP ORDINANCE (VT) First Reading

Mayor Terrigno asked for discussion of the ordinance by the City Attorney. The terms "necessaries" and "responsible for each other's welfare" were discussed. Section 2D was discussed. Mr. Heilman moved to amend the ordinance to require domestic partners to live together. Mayor Terrigno asked to table the motion until after public discussion. Mr. Heilman withdrew the motion. Section 8 was discussed as perhaps being too broad. Fees for filing domestic partnership statements were discussed. Mayor Terrigno called for a public hearing.

Mayor Terrigno moved to adopt the Committee's recommendation as policy and direct the Committee to develop an RFP for the City Manager for revision or approval, then the RFP will go to the Council for approval. Mr. Viterbi seconded the motion and added a deadline of bringing the RFP to the Council at its next regular meeting. Mr. Heilman asked for more time to study the proposal and objected to voting. Mr. Viterbi also objected to voting. On a roll call vote, the motion carried unanimously.

CITY MANAGER SEARCH

The Committee reported 100 resumes have been received with 10 to 12 good candidates. The Council agreed to interview candidates together starting approximately March 10th on weekends, if possible. The Committee Chairman requested $300 to attend the California League of Cities meeting in Monterey for recruitment purposes. Mr. Viterbi moved to approve the request. Mr. Schulte seconded. On a roll call vote, Ms. Albert, Mr. Heilman, Mr. Schulte, and Mr. Viterbi voted aye. Mayor Terrigno abstained. The motion carried.

INSURANCE

Dori Stegman stated the report will be distributed to the Council on February 8, 1985. Mr. Viterbi noted March 29 is the deadline to cancel insurance.

REQUEST TO ADDRESS CITY COUNCIL

The City Manager noted no representative of the Bachelors and Bachelorettes dance group was present to support the group's request for the Council to reconsider the site for Council meetings on Thursday nights. The Council tabled the item until the February 21 meeting.

IDENTIFICATION PROCEDURES (SS)

The City Attorney explained the ordinance as an amendment to the Code. Violation of the ordinance will be a misdemeanor. Jerry Hyde, 8952 Dicks Street, Manager of Rage, opposed the proposed ordinance. The legal responsibility of clubs was discussed in the event the ordinance should pass. Charles Stewart, Dr. Nathan Woodruff, Jr., of Mission Hills, Greg Byrd, 3842 Aloha Street, and Richard Phillips, 924 North Ogden Drive, No. 4, spoke in support of the ordinance. Scott Forbes, 652 North La Peer, spoke in opposition to the ordinance.

The City Attorney read the final clause of Chapter 3, Section B and Section A. Mr. Heilman moved to limit public debate to ten minutes. Ms. Albert seconded.

John O'Brien, 1641 North Alexandria Avenue, Joi Jackson, 8608 North Holloway Drive, No. 325, Arturo Olivas, 2606 Corralitas Drive, Dennis Sheldon, 3842 Aloha Street, Colin Gibson, 1349 Elysian Park Drive, and Sallie Fiske, 6617 Waring, supported the ordinance. Mr. Heilman moved to waive further reading and adopt the ordinance as drafted. Mr. Schulte seconded. The City Attorney suggested an additional section be added as a new 4302, entitled "Proof of Age - Uniform Treatment," to state all business establishments of any kind in the City of West Hollywood which require proof of age for admittance or for service shall inspect for such identification in accordance with Section 4300 in a uniform and nondiscriminatory manner. The City Attorney suggested the Council move to adopt the ordinance in concept and put the ordinance into the Code for first reading. Mr. Heilman agreed. Mayor Terrigno suggested that cross-dressing not be prohibited. Mr. Heilman accepted this amendment. On a roll call vote, the Council approved adoption of the ordinance unanimously. The motion carried.

Mr. Viterbi requested the outdoor display merchandising issue be addressed out of order.

Warwick Sims, 414 North Huntley Drive, asked permission to display merchandise on his private business property. Mr. Viterbi moved to request the Business and Finance Committee to work with the City Attorney to revise the outdoor display ordinance and return it to the Council in two weeks. Mayor Terrigno seconded with the amendment to make sure public displays will not interfere with passage of people. Mr. Viterbi accepted the amendment. Jeanne Dobren, 9000 Cynthia Street, spoke in opposition to revision of the ordinance. The motion was approved unanimously.

(Recess from 11:40 p.m., February 7, 1985, to 12:03 a.m., February 8, 1985)

RESOLUTION AGAINST PREEMPTIVE (RENT CONTROL) LEGISLATION AB483 (HA)

Ms. Albert read the resolution. Mayor Terrigno called for a vote in favor of passing the resolution and sending it to the Governor and members of the Assembly and Senate. The suggestion was approved unanimously.

Attachment 5

West Hollywood Municipal Code

Title 9 Public Peace, Morals and Safety
Article 2 – Miscellaneous
Chapter 9.12 Business Establishments – Entrance and Service Requirements

9.12.010 Proof of Age.

No business establishment of any kind in the City of West Hollywood which requires proof of age for admittance or for service shall enforce such requirement except as hereafter provided:

a. No business establishment shall require any person to produce more than one unexpired document issued by a federal, state, county, or municipal government or by any subdivision or agency thereof, or a valid passport of any nation, which has affixed to it the name, date of birth, and photograph of the person to whom it was issued.

b. If a person presents a document other than that listed in subsection (a), the business establishment may, at its discretion, require the person to produce additional documents; provided, however, that the establishment shall not deny admission or service on this basis except upon its good faith judgment that the document or documents presented are not trustworthy.

(Ord. 85-23, 1985; Ord. 85-21, 1985; prior code § 4500)

9.12.020 Proof of Age – Displaying the Rule.

All business establishments that require proof of age shall display a sign clearly visible from the point of entry which recites verbatim the following:

PROOF OF AGE REQUIREMENT

No business establishment shall require more than one unexpired picture identification issued by any agency of the government which has the holder's name and date of birth attached. A business establishment may request more than one identification if no valid picture identification is presented.

If you believe that this law has been violated, call or write the West Hollywood City Hall, 8300 Santa Monica Blvd., West Hollywood, California 90069. (323) 854-7400.

All business establishments subject to this chapter shall maintain such sign in good repair, and in accordance with any further stipulation, including the posting of the current address of the city's enforcement office within five days' written notice by the city of any change.

(Ord. 85-23, 1985; Ord. 85-21, 1985; prior code § 4501)

9.12.030 Proof of Age – Uniform Treatment.

All business establishments of any kind in the City of West Hollywood which require proof of age for admittance or for service shall inspect for such identification in accordance with Section 9.12.010 in a uniform and nondiscriminatory manner.

(Ord. 85-23, 1985; Ord. 85-21, 1985; prior code § 4502)

9.12.040 Discrimination on the Basis of Dress – Prohibited Activity.

No business establishment of any type in the city which conditions entry or service upon standards of appearance or dress shall enforce any such rule or condition when the purpose or effect of such enforcement is to arbitrarily discriminate against any person or any class or category of persons. Violations of this chapter shall include but are not limited to a rule or condition that the patron not wear open-toed shoes or be required to wear clothes customarily associated with his or her biological sex.

(Ord. 85-23, 1985; Ord. 85-21, 1985; prior code § 4503)

REFERENCES

ACO: City of Los Angeles AIDS Coordinator's Office website, lacityaids.org/aboutus.html (accessed 6/18/2016).

CA: Carson Anderson – personal correspondence, July 25, 2015.

CBS-IV: Charles B. Stewart III, telephone Interview, November 2015.

Clendinen: Clendinen, Dudley and Nagourney, Adam, Out for Good, The Struggle to Build a Gay Rights Movement in America, Simon & Schuster, New York, 1999.

GLA: Faderman, Lillian and Timmons, Stuart, Gay L.A., A History of Sexual Outlaws, Power Politics, and Lipstick Lesbians, University of California Press, Berkeley and Los Angeles, 2006.

Dave Johnson Files: Dave Johnson Papers, (unprocessed), ONE Archives at the University of Southern California Libraries, Los Angeles, California.

Frontiers: Staff, "Racial Discrimination Still Plagues Gay and Lesbian Community," Frontiers Magazine, May 15-22,1985,from www.frontiersmedia.com/uncategorized/2012/07/24/racial-discrimination-still-plagues-gay-and-lesbian-community/ (accessed 11/2/2015)

Hooker: Hooker, Evelyn, "Male Homosexuals and Their Worlds," from Sexual Inversion, Marmor, Judd (Editor), Basic Books, New York, 1965.

LAFP: Dave Johnson, "Studio One hit with charges of racism, sexist discrimination," Los Angeles Free Press, Vol. 12, No. 23 (569), dated June 13-19, 1975. (Part of the ONE Archives' Dave Johnson files)

LAT: Staff, "Discotheques Dance," Los Angeles Times, August 11, 1976.

WH Minutes: Obtained at the City Clerk's office of the City of West Hollywood.

WH Municipal Code: via the internet: weho.org/city-hall/municipal-code; under Title 9, Public Peace, Safety and Morals.

HISTORIC RESOURCES ASSESSMENT REPORT

MITCHELL CAMERA FACTORY
661-665 ROBERTSON BOULEVARD AND 648-652 NORTH LA PEER DRIVE
WEST HOLLYWOOD, LOS ANGELES COUNTY, CALIFORNIA
(APN 4336-009-007)

PREPARED FOR
LATHAM & WATKINS LLP
355 SOUTH GRAND AVENUE
LOS ANGELES, CA 90071-1560

PREPARED BY
MARGARITA J. WUELLNER, PH.D.
CHRISTIAN TAYLOR, B.A., M.H.P. CANDIDATE
RITA Y. COEFIELD, B. ARCH., M.H.P. CANDIDATE

PCR SERVICES CORPORATION
201 SANTA MONICA BOULEVARD, SUITE 500
SANTA MONICA, CA 90401

NOVEMBER 2014

Table of Contents

Page

I. INTRODUCTION 1
- A. Executive Summary 1
- B. Project Site 1
- C. Project Description 1
- D. Research and Field Methodology 1

II. REGULATORY FRAMEWORK 5
- A. Federal Level 5
  - 1. National Register of Historic Places 5
- B. State Level 6
  - 1. California Register of Historical Resources 6
  - 2. California Office of Historic Preservation Survey Methodology 8
- C. Local Level 9
  - 1. City of West Hollywood 9

III. ENVIRONMENTAL SETTING 11
- A. Historic Context 11
  - 1. Changes to the Film Industry – The Introduction of Sound 12
  - 2. New Film Technology Manufacturing 13
  - 3. The Mitchell Camera Corporation 14
  - 4. Mitchell Camera Factory 18
  - 5. Factory Architecture 19
  - 6. 661-665 Robertson Boulevard/648-652 La Peer after the Mitchell Camera Corporation 21
  - 7. Studio One and the LGBT Community 24
- B. Historic Resources Identified 29
  - 1. Known Historical Resources in the Project Vicinity 29
  - 2. Previous Evaluations of the Project Site 30
  - 3. Evaluation of Historical Resources: 661-665 Robertson Boulevard and 648-652 North La Peer Drive, APN: 4336-009-007 (Project Site) 30
- C. Statement of Significance 35
  - 1. National Register and California Register 35
  - 2. City of West Hollywood 38
- D. Conclusion 42

IV. BIBLIOGRAPHY 43
- A. Publications 43
- B. Newspapers and Periodicals 44

Table of Contents (Continued)

Page

V. APPENDIX

A Los Angeles County Assessor's Index Map, Assessor Map, and Property Record
B Historic Maps
C Record Search Results
D Current Photographs
E Professional Qualifications

List of Tables

Page

1 Mitchell Camera Model History 16
2 History of Occupancy for 648 La Peer 22

List of Figures

Page

1 Regional and Vicinity Map 3
2 Project Site 4
3 Aerial view of West Hollywood, ca. 1931. The Sherman Yards can be seen in the center of the photo. The project site is east (below and left) of the rail yards. 12
4 Fox's Movietone venture added sound to newsreels as well as feature films. 13
5 The Mitchell Camera Corporation 14
6 Mitchell NC High Speed 15
7 The Mitchell Blimped News Camera (BNC) 15
8 Technicolor 3-Strip Camera 15
9 1951 Fire on Robertson. The Mitchell Factory can be seen in the distance, to the right of the blazing plastics factory 23
10 An advertisement for the family friendly Spaghetti Village. 23
11 Scott Forbes, owner of Studio One. 29
12 Advertisement for Studio One. 29
13 The Mitchell Factory as it appeared in the 1930s 32
14 Example of Truscan's flat roof Series B structure 32
15 Sanborn Map Detail from 1950 showing footprint of Factory and Two Offices. 33

I. INTRODUCTION

A. EXECUTIVE SUMMARY

This historic resources assessment report, completed by PCR Services Corporation (PCR), documents and evaluates the history and architecture of the commercial/industrial property located at 661-665 Robertson Boulevard and 648-652 North La Peer Drive, West Hollywood, Los Angeles County, California. The assessment report includes a discussion of the survey methods used, the historic context for the property and surrounding area, the regulatory setting, and the identification and evaluation of the subject property for compliance with the California Environmental Quality Act (CEQA).

The existing buildings on the Project Site appear ineligible for listing under any federal, state or local eligibility criteria. As a result of these investigations, the subject property is assigned a California Historical Resource Status Code of 6Z, found ineligible for National Register, California Register or local designation through survey evaluation. No further evaluation is needed to comply with CEQA.

B. PROJECT SITE

The former Mitchell manufacturing facility is a two-story commercial/industrial building situated on an approximately .95 acre site encompassing Lots 7 & 8 of Tract 3585 and Lots 36, 37, 38, 39 of the Winnetka Tract.[1] The Los Angeles County assessor's map, index map, and property record are provided in Appendix A. The project site is bounded by La Peer Drive to the west and Robertson Boulevard to the east, and is situated south of Santa Monica Boulevard and north of Melrose Avenue, as shown in **Figure 1**, *Regional and Vicinity Map,* and **Figure 2**, *Project Site*. The project site is located within a commercial zone of one- and two-story commercial buildings in the Melrose Triangle. Situated within West Hollywood's Melrose/Beverly District Commercial Sub-Area, the project site is zoned for commercial use, and contains approximately three (3) improvements originally constructed between 1929 and 1940. In 1929 the original two-story factory was constructed at 661 Robertson Boulevard, and an adjacent one-story office was built at 665 Robertson Boulevard; and in 1940 a second one-story office building was added at the rear (west) of the original 1929 office. The project site is currently occupied by The Factory nightclub, and Fitness Factory LA. There is a surface parking on the project site at 648-652 North La Peer, north of the subject building.

C. PROJECT DESCRIPTION

The proposed project would demolish the existing mixed-use commercial nightclub and fitness facility and redevelop the site with a mixed-use hotel/retail project.

D. RESEARCH AND FIELD METHODOLOGY

The Historic Resource Assessment was conducted by PCR's Cultural Resources personnel Margarita J. Wuellner, Ph.D., Director of Historic Resources, Christian Taylor, B.A., M.H.P. Candidate, Historian Intern, and Rita Y. Coefield, B. Arch., M.H.P. Candidate, Historian Intern, who meet and exceed the *Secretary of the Interior's Professional Qualification Standards* in history, and architectural history. Professional qualifications are provided in Appendix E.

[1] *Los Angeles County Assessor, Map Book 38, page 62, and Map Book 11, page 61.*

The historical resources evaluation of the subject property involved a multi-step methodology. A review of the National Register of Historic Places (National Register) and its annual updates, the California Register of Historical Resources (California Register), the California Historic Resources Inventory Database maintained by the State Office of Historic Preservation (OHP), and the City of West Hollywood's inventory of historic properties was performed to identify any previously recorded properties within or near the survey area. An intensive pedestrian site survey was undertaken to document the existing conditions of the property.

The National Register and California Register evaluation criteria as well as the City of West Hollywood's Cultural Heritage Preservation Ordinance were employed to assess the significance of the property. In addition, National Register Bulletin 15: *How to Apply the National Register Criteria for Evaluation,* and the OHP's *Instructions for Recording Historical Resources (1995)* were utilized. The following tasks were performed for the study:

- Conducted field inspections of the subject property, and utilized the survey methodology of the State OHP.
- Conducted site-specific research on the subject property utilizing building permits, the building manufacturer's catalog, assessor's records, Sanborn fire insurance maps, historical photographs, and other published sources on local history as well as available sources on the history of the Hollywood film production, camera technology, and the LGBT rights movement of the 1960s and 70s.
- Researched various trade journals, articles, and advertisements mentioning Truscon buildings. Many of Truscon's advertisements included photographs of buildings they constructed for other companies. This research resulted in the discovery of buildings similar to the building on the project site (steel frame, steel panels, similar windows, etc.). Although additional research beyond the scope of this report would be required to positively identify additional Truscon buildings, the investigation into the company's history revealed a large scale operation that produced thousands of prefabricated structures throughout the United States.
- Reviewed and analyzed ordinances, statutes, regulations, bulletins, and technical materials relating to federal, state, and local historic preservation, designation assessment processes, and related programs.
- Conducted oral interviews with residents/former residents of the West Hollywood area whose identities have been kept confidential in order to protect their privacy.
- Evaluated potential historic resources based upon criteria used by the National Register, the California Register, and City of West Hollywood Cultural Heritage Preservation Ordinance.

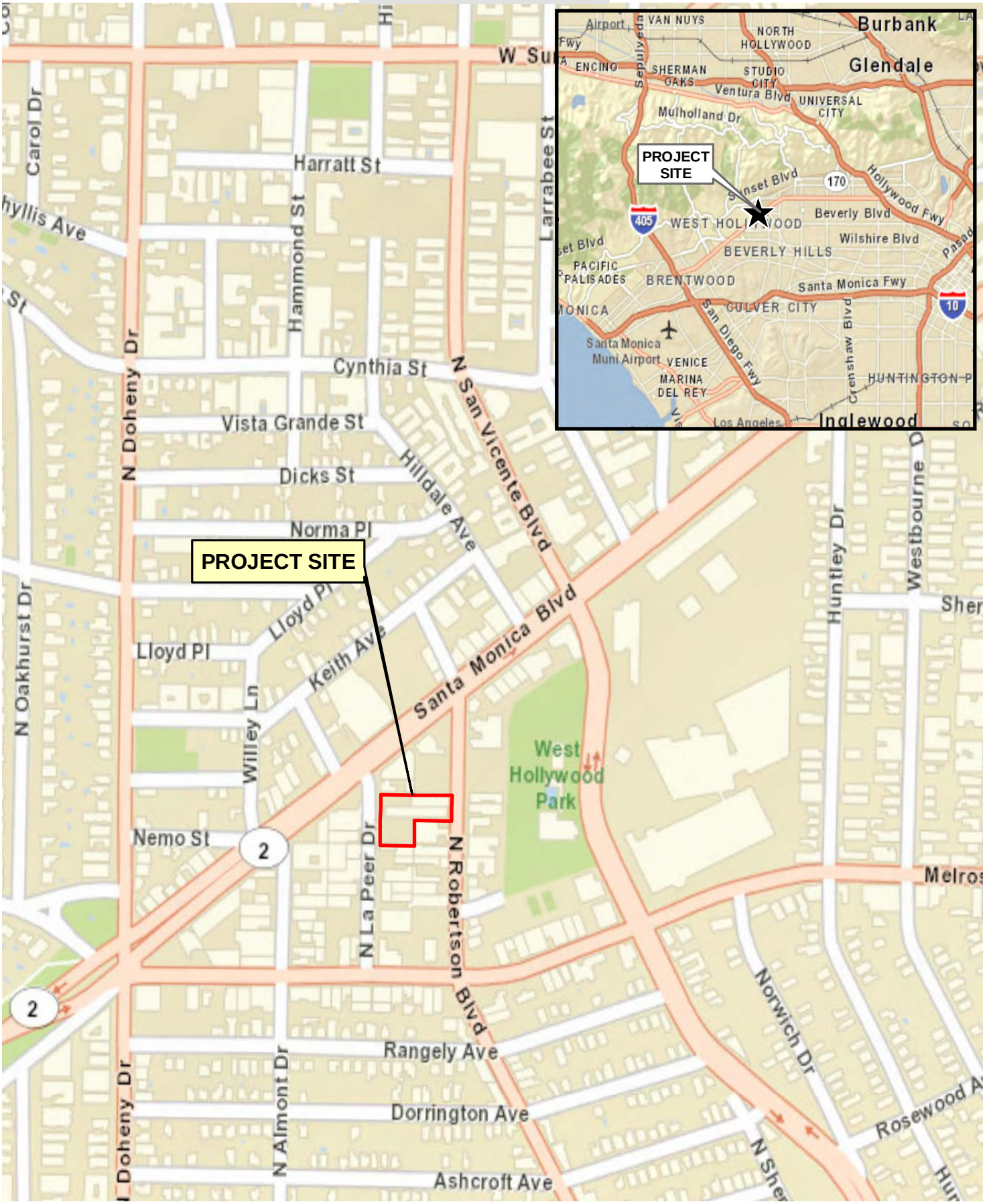

0 500 1,000 Feet

Regional and Vicinity Map

Faring Capital – Robertson Lane Hotel Project

Source: ESRI Street Map, 2009; PCR Services Corporation, 2014.

FIGURE

1

PCR

N

0 100 200 Feet

Project Site Map

Faring Capital – Robertson Lane Hotel Project

Source: Micosoft, 2010; PCR Services Corporation, 2014.

FIGURE

2

II. REGULATORY FRAMEWORK

Historic resources fall within the jurisdiction of several levels of government. Federal laws provide the framework for the identification, and in certain instances, protection of historic resources. Additionally, states and local jurisdictions play active roles in the identification, documentation, and protection of such resources within their communities. The National Historic Preservation Act (NHPA) of 1966, as amended, the California Register of Historical Resources created in 1992, and the City of West Hollywood Cultural Heritage Preservation Ordinance enacted in 1989, are the primary laws and regulations governing the evaluation and significance of historic resources of national, state, regional, and local importance. Descriptions of these relevant laws and regulations are presented below.

A. FEDERAL LEVEL

1. National Register of Historic Places

The National Register of Historic Places (National Register) was established by the National Historic Preservation Act of 1966, as "an authoritative guide to be used by Federal, State, and local governments, private groups and citizens to identify the Nation's cultural resources and to indicate what properties should be considered for protection from destruction or impairment."[2] The National Register recognizes properties that are significant at the national, state, and/or local levels.

To be eligible for listing in the National Register, a resource must be significant in American history, architecture, archaeology, engineering, or culture. Four criteria for evaluation have been established to determine the significance of a resource:

a. It is associated with events that have made a significant contribution to the broad patterns of our history;

b. It is associated with the lives of persons significant in our past;

c. It embodies the distinctive characteristics of a type, period, or method of construction or that represent the work of a master, or that possess high artistic values, or that represent a significant and distinguishable entity whose components may lack individual distinction;

d. It yields, or may be likely to yield, information important in prehistory or history.[3]

Districts, sites, buildings, structures, and objects of potential significance that are 50 years in age must meet one or more of the above criteria. However, the National Register does not prohibit the consideration of properties less than fifty years in age whose exceptional contribution to the development of American history, architecture, archeology, engineering, and culture can clearly be demonstrated under Criterion Consideration G. Examples of Properties that meet Criteria Consideration G: Properties that Have Achieved Significance Within the Past Fifty Years:

---

[2] *36 Code of Federal Regulations (CFR) Section 60.2.*

[3] *"Guidelines for Completing National Register Forms," National Register Bulletin 16, U.S. Department of Interior, National Park Service, September 30, 1986. This bulletin contains technical information on comprehensive planning, survey of cultural resources and registration in the National Register of Historic Places.*

- A property that is less than fifty years old.
- A property that continues to achieve significance into a period less than fifty years before the nomination.
- A property that has non-contiguous Periods of Significance, one of which is less than fifty years before the nomination.
- A property that is more than fifty years old and had no significance until a period less than fifty years before the nomination.

In addition to meeting the Criteria for Evaluation, a property must have integrity. "Integrity is the ability of a property to convey its significance."[4] According to *National Register Bulletin 15 (NRB)*, the National Register recognizes seven aspects or qualities that, in various combinations, define integrity: location, design, setting, materials, workmanship, feeling, and association. In assessing a property's integrity, the National Register criteria recognize that properties change over time, therefore, it is not necessary for a property to retain all its historic physical features or characteristics. The property must retain, however, the essential physical features that enable it to convey its historic identity.[5]

For properties that are considered significant under National Register Criteria A and B, the *National Register Bulletin, How to Apply the National Register Criteria for Evaluation* states that a property that is significant for its historic association is eligible if it retains the essential physical features that made up its character or appearance during the period of its association with the important event, historical pattern, or person(s).[6]

In assessing the integrity of properties that are considered significant under National Register Criterion C, the *National Register Bulletin, How to Apply the National Register Criteria for Evaluation* provides that a property important for illustrating a particular architectural style or construction technique must retain most of the physical features that constitute that style or technique.[7]

B. STATE LEVEL

1. California Register of Historical Resources

The Office of Historic Preservation (OHP), as an office of the California Department of Parks and Recreation, implements the policies of the NHPA on a statewide level. The OHP also carries out the duties as set forth in the Public Resources Code (PRC) and maintains the California Historical Resources Inventory and the California Register of Historical Resources. The State Historic Preservation Officer (SHPO) is an appointed official who implements historic preservation programs within the state's jurisdictions. Also implemented at

[4] *National Register Bulletin 15, p. 44.*

[5] *"A property retains association if it is the place where the event or activity occurred and is sufficiently intact to convey that relationship to an observer. Like feeling, association requires the presence of physical features that convey a property's historic character. . Because feeling and association depend on individual perceptions, their retention alone is never sufficient to support eligibility of a property for the National Register." Ibid, 15, p. 46.*

[6] *Ibid.*

[7] *"A property that has lost some historic materials or details can be eligible if it retains the majority of the features that illustrate its style in terms of the massing, spatial relationships, proportion, pattern of windows and doors, texture of materials, and ornamentation. The property is not eligible, however, if it retains some basic features conveying massing but has lost the majority of the features that once characterized its style." Ibid.*

the state level, CEQA requires the identification of any substantial adverse impacts from a project that may affect the significance of identified historical resources.

The California Register of Historical Resources (California Register) was created by Assembly Bill 2881 which was signed into law on September 27, 1992. The California Register is "an authoritative listing and guide to be used by state and local agencies, private groups, and citizens in identifying the existing historical resources of the state and to indicate which resources deserve to be protected, to the extent prudent and feasible, from substantial adverse change."[8] The criteria for eligibility for the California Register are based upon National Register criteria.[9] Certain resources are determined by the statute to be automatically included in the California Register, including California properties formally determined eligible for, or listed in, the National Register.[10]

The California Register consists of resources that are listed automatically and those that must be nominated through an application and public hearing process. The California Register automatically includes the following:

- California properties listed on the National Register of Historic Places and those formally Determined Eligible for the National Register of Historic Places;
- California Registered Historical Landmarks from No. 770 onward;
- Those California Points of Historical Interest that have been evaluated by the OHP and have been recommended to the State Historical Commission for inclusion on the California Register.[11]

Other resources which may be nominated to the California Register include:

- Individual historical resources;
- Historical resources contributing to historic districts;
- Historical resources identified as significant in historical resources surveys with significance ratings of Category 1 through 5 (discussed further below);
- Historical resources designated or listed as local landmarks, or designated under any local ordinance, such as an historic preservation overlay zone.[12]

To be eligible for the California Register, a historic resource must be significant at the local, state, or national level, under one or more of the following four criteria:

1. Is associated with events that have made a significant contribution to the broad patterns of California's history and cultural heritage;

---

[8] *California Public Resources Code, Section 5024.1(a).*

[9] *California Public Resources Code Section 5024.1(b).*

[10] *California Public Resources Code Section 5024.1(d).*

[11] *Ibid.*

[12] *California Public Resources Code Section 5024.1(e).*

2. Is associated with the lives of persons important in our past;

3. Embodies the distinctive characteristics of a type, period, region, or method of construction, or represents the work of an important creative individual, or possesses high artistic values; or

4. Has yielded, or may be likely to yield, information important in prehistory or history.

Additionally, a historic resource eligible for listing in the California Register must meet one or more of the criteria of significance described above and retain enough of its historic character or appearance to be recognizable as a historic resource and to convey the reasons for its significance. Historical resources that have been rehabilitated or restored may be evaluated for listing.[13]

Integrity is evaluated with regard to the retention of location, design, setting, materials, workmanship, feeling, and association. The resource must also be judged with reference to the particular criteria under which it is proposed for eligibility.[14]

2. California Office of Historic Preservation Survey Methodology

The evaluation instructions and classification system prescribed by the California Office of Historic Preservation in its Instructions for Recording Historical Resources provide a three-digit evaluation rating code for use in classifying potential historic resources. The first digit indicates one of the following general evaluation categories for use in conducting cultural resources surveys:

1. Listed on the National Register or the California Register;

2. Determined eligible for listing in the National Register or the California Register;

3. Appears eligible for the National Register or the California Register through survey evaluation;

4. Appears eligible for the National Register or the California Register through other evaluation;

5. Recognized as Historically Significant by Local Government;

6. Not eligible for any Listing or Designation; and

7. Not evaluated for the National Register or California Register or needs re-evaluation.

The second digit of the evaluation status code is a letter code indicating whether the resource is separately eligible (S), eligible as part of a district (D), or both (B). The third digit is a number that is used to further specify significance and refine the relationship of the property to the National Register and/or California Register. Under this evaluation system, categories 1 through 4 pertain to various levels of National Register and California Register eligibility. Locally eligible resources are given a rating code level 5. Properties found ineligible for listing in the National Register, California Register, or for designation under a local ordinance through survey evaluation are given a status code of 6Z.

[13] *California Code of Regulations, California Register of Historical Resources (Title 14, Chapter 11.5), Section 4852(c).*

[14] *Ibid.*

C. LOCAL LEVEL

1. City of West Hollywood

The City of West Hollywood enacted a Cultural Heritage Preservation Ordinance in 1989, which defines West Hollywood cultural resources for the City. According to the ordinance, cultural resources can be historic structures, improvements, natural features, objects, sites, and areas of significance located within the City that exemplify or reflect special elements of the city's aesthetic, architectural, cultural, economic, engineering, political, natural, or social history and possesses an integrity of design, location, materials, setting, workmanship feeling, and association. The City's Historic Preservation Commission (HPC) and the City Council regulate cultural resources in the City of West Hollywood.

19.58.050 Criteria for Designation of Cultural Resources.

The Historic Preservation Commission may approve a nomination application for and recommend designation of, and the Council may designate a cultural resource, or any portion thereof (both interior and exterior) or historic district in compliance with Sections 19.58.060 (Designation of Historic Districts) and 19.58.070 (Review and Approval of Designations) if it finds that the cultural resource meets one or more of the following criteria.

A. *Exemplifies Special Elements of the City.* It exemplifies or reflects special elements of the city's aesthetic, architectural, cultural, economic, engineering, political, natural, or social history and possesses an integrity of design, location, materials, setting, workmanship feeling, and association in the following manner:

   1. It embodies distinctive characteristics of a period, method, style, or type of construction, or is a valuable example of the use of indigenous materials or craftsmanship; or
   2. It contributes to the significance of a historic area by being:
      a. A geographically definable area possessing a concentration of historic or scenic properties; or
      b. A thematically related grouping of properties which contribute to each other and are unified aesthetically by plan or physical development; or
   3. It reflects significant geographical patterns, including those associated with different eras of growth and settlement, particular transportation modes, or distinctive examples of community or park planning; or
   4. It embodies elements of architectural design, craftsmanship, detail, or materials that represent a significant structural or architectural achievement or innovation; or
   5. It has a unique location or singular physical characteristic or is a view or vista representing an established and familiar visual feature of a neighborhood, community, or the city; or

B. *Example of Distinguishing Characteristics.* It is one of the few remaining examples in the city, region, state or nation, possessing distinguishing characteristics of an architectural or historical type or specimen; or

C. *Identified with Persons or Events.* It is identified with persons or events significant in local, state, or national history; or

D. *Notable Work.* It is representative of the work of a notable architect, builder, or designer.

(Ord. 03-663 § 4 (part), 2003: Ord. 02-643 § 48, 2003: Ord. 01-594 § 2 (Exh. A), 2001)

III. ENVIRONMENTAL SETTING

A. HISTORIC CONTEXT

The historic context developed below presents important themes associated with the historical development of the area surrounding Robertson Boulevard and La Peer Drive in West Hollywood, California, and the development of the Mitchell Camera Factory. Research indicates the property is associated with the following historical and architectural themes: Hollywood's Evolution into Sound Films, Mitchell Camera Development, Prefabricated Industrial Architecture, and The Modern Gay Rights Movement.

The area currently known as West Hollywood was once part of Rancho La Brea, a land grant given to Spanish soldiers for their service. For many years, the area was used as farmland. When the railroads expanded west from downtown Los Angeles, they opened the way for new suburban developments. Moses Sherman established the Sherman Yards near the present day intersection of Melrose Avenue and San Vicente Boulevard. The yards provided the Los Angeles Railroad (LARR), later known as the Pacific Electric, with all the necessary facilities to build and maintain railcars. The yards were the center of several rail lines and were known as the cornerstone of the LARR system. Twelve acres north of the rail yards was sold to E.H. White in 1896. He subdivided the land and established the townsite of Sherman. Railway workers began to settle the area as the small town grew rapidly. The project site is located within the Winnetka Tract and Tract No. 3585 in the Melrose Triangle. The Winnetka Tract was surveyed October 1906 by Jos. A. Hurley (Appendix B). "By 1912, Sherman had been nicknamed 'Queen of the Foothills,' and booster publications and guidebooks began to praise its beneficent climate, ideal location, and the quality of its community institutions."[15] Tract No. 3585 was subdivided from part of the Rancho Rodeo de las Aguas tract and surveyed in 1920 by William M. Johnson (Appendix B).

Despite the establishment of a chamber of commerce in 1920, there still remained no municipal government in Sherman. East of Sherman, Hollywood was booming with the growing film industry. In 1925, Sherman renamed itself West Hollywood to capitalize on the growth of its eastern neighbor. The community continued to grow, adding residential neighborhoods south of the rail yards. During the 1920s new industrial districts developed west of the yards.[16] The area west of the yards, known as the Melrose Triangle, bound by San Vicente Boulevard in the east, Santa Monica Boulevard in the north and west, and Melrose Avenue in the south contained a number of industrial facilities from rubber product manufacturers to sheet metal shops. The appearance of the area in ca. 1931 is shown in the historic aerial photograph in **Figure 3**. The industrial character of the Melrose Triangle continued through the 1940s as shown on the Sanborn map from 1950 in Appendix B. Today the area no longer contains operating industrial facilities and is developed with multiple commercial properties as well as multi-family housing.

---

[15] *Johnson Heuman Research Associates, "Historic Resources Survey," City of West Hollywood, 1967-87, p. 8.*

[16] *Ibid., p. 4-21.*

Digitally reproduced by the USC Digital Library. From the California Historical Society Collection at the University of Southern California

Figure 3: Aerial view of West Hollywood, ca. 1931. The Sherman Yards can be seen in the center of the photo. The project site is east (below and left) of the rail yards.

1. Changes to the Film Industry – The Introduction of Sound

Some have claimed that that the beginning of the sound era in the film industry was the end of Hollywood's golden age. Many know the stories of silent film stars who struggled to find work after it was discovered they did not have the voice for pictures with sound. Aside from out-of-work stars, few really grasp the change the industry underwent to make sound pictures a reality. "The transition was also inevitable: sound was something that cinema lacked, and sooner or later it would have to be added."[17] The transition to sound films did not occur overnight. It required upstart studios to take substantial risk, seeking a way to compete with the more prominent film producers of the time. While the larger studios remained skeptical about sound technology, which had been attempted many times unsuccessfully, Warner Brothers, followed by Fox Film, saw sound as a way to become established in the industry.

Warner Brothers' experimentation with sound resulted in the production of the world's first "talkie," *The Jazz Singer*. The film grossed two million dollars, setting the studio up financially while simultaneously demonstrating the feasibility of talking motion pictures. In April of 1926, Warner Brothers formed a partnership with Western Electric to produce and distribute sound films and the device that made them possible. This partnership, known as Vitaphone, was the beginning of a new era in film production.

[17] *Donald Crafton, The Talkies: American Cinema's Transition to Sound, 1926-1931 (Berkley: University of California Press, 1999), p. 1.*

While Warner Brothers was pedaling its Vitaphone equipment to the other major studios, "Fox Film, another second-tier producer, bought the rights to a sound-on-film system which had been developed by Theodore Case."[18] Fox's product, known as Movietone (**Figure 4**), was more mobile than the Vitaphone system, allowing films to be shot outdoors and on location. Eventually the major studios would give in to the new sound technology, resulting in the end of Hollywood's silent era. "The Transition was driven by the dominant studios' need to respond to competition from the outsiders Warners and Fox."[19]

Figure 4: Fox's Movietone venture added sound to newsreels as well as feature films.

2. New Film Technology Manufacturing

The 1930s were an era of innovation within the film industry. Entrepreneurs created new industries and technologies to solve the problems created by Hollywood's transition to sound films. Seeking to compete with their films rather than their technology, the studios and manufacturers collaborated together to develop new production equipment. "There has never been such a lightning retooling of an entire industry—even emergencies were slower—nor such a wholesale transformation in the shape and acceptance of new forms of mass entertainment."[20] "Editing changed from a scissors, glue, and rewinds operation to one requiring more elaborate equipment."[21] During the silent era, technical matters were left to the cameramen, the laboratory, the studio machine shop, or key manufacturers. However with sound productions, studios required sophisticated equipment and therefore began organizing specific departments to maintain their cameras.

One major problem that plagued the production of sound films was the noise created by the camera's internal mechanism. "Just as the viewer should not glimpse the camera's reflection in a mirror, he or she should not hear the camera's whir."[22] In 1927 the Fox-Case Company purchased a newly established camera

---

[18] *Ibid., p. 11.*

[19] *Ibid., p. 3.*

[20] *Alexander Walker, The Shattered Silents; How the Talkies Came to Stay (New York: William Morrow, 1979), p. vii.*

[21] *David Bordwell, Janet Staiger, and Kristin Thompson, The Classical Hollywood Cinema: Film Style and Mode of Production to 1960 (New York: Columbia University Press, 1985), p. 298.*

[22] *Ibid., p. 300.*

company, the Mitchell Camera Corporation, with the intent to develop a quiet camera suitable for the production of sound films. Throughout the 1930s, Fox collaborated with the Mitchell Camera Corporation, as well as the well-established camera company of Bell & Howell, to solve the silent running camera dilemma. "The Mitchell firm redesigned its basic model – first as the NC (1932), then the BNC (1934) – and created the universally used studio camera of the decades before 1960."[23]

3. The Mitchell Camera Corporation

Two camera repairmen, Henry Boger and George A. Mitchell, established the Mitchell Camera Corporation (**Figure 5**) in 1919. While employed with the National Motion Picture Repair Company, Mitchell and Boger repaired the popular Bell and Howell cameras used by the major studios at the time. Their knowledge of the popular Bell and Howell models gave the pair an advantage in developing their own camera. Boger and Mitchell understood the Bell and Howell model's flaws and used that knowledge to improve the popular camera's design. In 1919, the pair purchased John E. Leonard's rackover device, "an invention that was to become the hallmark of early Mitchell models."[24] Early Mitchell cameras quickly became favored among Hollywood cameramen. "Leonard's rackover device allowed the cameraman to frame and compose through the lens, in the photographing position merely by the twist of a handle."[25] In contrast, the Bell and Howell model required a much more time consuming process. Mitchells first camera, the Model A (1920-24) and later the high-speed Model B (1925) quickly became the popular choice among Hollywood studios.

Figure 5: The Mitchell Camera Corporation[26]

Mitchell struggled to meet Hollywood's demand for their product so in 1927 George Mitchell and Henry Boger sold the business to the Fox-Case Company, formerly Fox Films. Fox was seeking to add the camera company to its technology department and its new Movietone venture. The Fox-Case Company retained the Mitchell name due to the manufacturer's popularity among the film industry and continued to pursue the development of improved camera technology. After selling his rights to the company and the camera technology he helped develop, George Mitchell's professional relationship with the company ended.[27] However, George Mitchell continued seeking new ways to improve the film camera. In 1930 Mitchell patented a quiet camera mechanism. In 1932 the Mitchell Camera Corporation released its new NC, or News Camera Model (**Figure 6**) featuring George Mitchells new mechanism. The NC became Mitchell's most famous and important camera design. Utilizing high precision parts, George Mitchell eliminated the gears used in previous models, reducing the noise output of the camera's internal mechanism. "At around 35 dB,

---

[23] *Ibid., p. 252.*

[24] *Laurence J. Roberts, "The Mitchell Camera: The Machine and Its Makers," in Society of Motion Picture and Television Engineers Journal, October 1, 1982, Vol. 10, No. 2, p. 141.*

[25] *Ibid., p. 145.*

[26] *Mitchell Camera Corporation, Filmnotes, Web. 3 July 2014. http://www.filmnotes.net/galleries/moviecameras/cine-cameras-m-p/*

[27] *" Inventor of Mitchell Camera in '34 Does it Again---at 83," Los Angeles Times, January 27, 1972, F14.*

the NC was quiet enough for unblimped use in exterior sound filming, as long as the microphone was not near the camera."[28] Two years later, Mitchell introduced the BNC model, a blimped version of the News Camera, further reducing the noise level of the camera to roughly 21 decibels. Despite its heavy weight, the BNC became the standard camera among Hollywood studios. The BNC (**Figure 7**) and updated models remained a popular option well into the 1960s.

Figure 6 (Left): Mitchell NC High Speed[29]
Figure 7 (Right): The Mitchell Blimped News Camera (BNC)[30]

In 1934 George Mitchell returned to the Mitchell Camera Corporation and helped develop the Technicolor Three-Strip camera (**Figure 8**), one of the first color cameras used in the film industry. Working in the Technicolor laboratories, Mitchell designed a camera movement that used three filmstrips producing a more accurate color combination.[31] However, the process was extremely expensive, sometimes tripling film budgets, and therefore failed to gain popularity among the major studios. In 1939, the Mitchell Camera Corporation was presented with an Academy Award for "important contributions in cooperative development of new improved Process Projection Equipment."[32] The special effects background projector used a similar mechanism as the one in the NC cameras, making the projectors quiet enough to be used on sound stages. One of Mitchell's Process Projectors was used to project special effects in the film *Gone With the Wind* and for this the company was given an Oscar for Scientific or Technical Award.[33]

Figure 8 (Left): Technicolor 3-Strip Camera[34]

[28] *Ibid, p. 147.*

[29] *Mitchell Camera Corporation, Filmnotes, Web. 3 July 2014. http://www.filmnotes.net/galleries/moviecameras/cine-cameras-m-p/*

[30] *Mitchell Camera Corporation, Filmnotes, Web. 3 July 2014. http://www.filmnotes.net/galleries/moviecameras/cine-cameras-m-p/*

[31] *David Bordwell, Janet Staiger, and Kristin Thompson, The Classical Hollywood Cinema: Film Style and Mode of Production to 1960 (New York: Columbia University Press, 1985), p. 354.*

[32] *The Academy of Motion Picture Arts and Sciences, Academy Award Database, http://www.oscars.org/awards/academyawards/index.html, Accessed on June 4, 2014.*

[33] *Ibid.*

[34] *Mitchell Camera Corporation, Filmnotes, Web. 3 July 2014. http://www.filmnotes.net/galleries/moviecameras/cine-cameras-m-p/*

Table 1

Mitchell Camera Model History

Camera Model	Additional Versions	Date	Description	Notes
The Mitchell Camera	Model A	1920-1924	The original camera that put the Mitchell Camera Corporation in the spotlight. Previous to the Mitchell Standard, studios used the Bell and Howell 2709. The Mitchell Standard was largely based on the Bell and Howell 2709 but Mitchell sought to improve upon the 2709's shortcomings.	The rackover design was invented and patented by John Leonard in 1917. Leonard sold the design to Mitchell and Boger in 1919. "The Rackover device was the single most important feature that launched the Mitchell Camera." (Roberts, p. 146)
The High Speed	Model B	1925	Featured a new camera movement that allowed operation up to 128 frames per second.	
Standard	Standard Sound, Model C, GC, GCN	1928	Similar to the High Speed but was restricted to 32 frames per second. The Standard and sub-models were basically modified versions of the High-speed (Model B).	
NC/BNC		1932/1934 (BNC)	Roberts claims this is Mitchell's most famous and most important camera. The NC, or News Camera, quieted the camera mechanisms to a level suitable for the "Sound Era" of filming. At 32 dB, NCs were quiet enough to film at outside locations.	The BNC is just a blimped version of the NC. The "blimp" further quiets the camera mechanism. NC/BNC cameras used a new precise mechanism that eliminated gears. This movement was "the standard design from which most later Mitchell movements evolved." Roberts, p. 144)
Technicolor 3-Strip		1934	Designed in collaboration with Technicolor, Mitchell produced a camera movement that used three film strips to produce a more accurate color combination on the film. While studios used the technology on a few films, it was fairly expensive leading most studios to shy away from it. The Technicolor Cameras were designed and maintained at Technicolor's Laboratories but machined in Mitchell's factory. (Bordwell, p.354)	

Table 1 (Continued)

Mitchell Camera Model History

Camera Model	Additional Versions	Date	Description	Notes
SS		1943 (?)	The SS was used by the Army Signal Corps throughout WWII. The Signal Corps used other cameras primarily but they did have a few SS models as well. The SS was a larger version of the NC with a built in optical sound recording galvanometer. The date of production is not known but the galvanometer was invented in 1943 by RCA.	
16mm Mitchell Professional	16-Pro, 16 High Speed, HSC, GC-16	1946	Mitchell's foray into 16mm cameras began with the 16mm Mitchell Professional. These cameras were introduced as the world's first 16mm professional cameras. They used many of the same features of the 35mm cameras just modified for 16mm film.	
VistaVision		Early 1950s	Used standard 35mm film but moved horizontally through the camera from left to right providing a wider frame. Many of the alternative film using cameras struggled to catch on because theater owners refused to purchase special projectors to show the films.	Partnered with Paramount
FC/BFC		1929/ 1953 (BFC)	Also known as the Fox Grandeur 70mm Camera. This camera was a modified High Speed (Model B) camera that provided a new aspect ration (Screen Shape) with a bigger and brighter picture. Like the VistaVision camera, the FC didn't catch on due to resistance from theater owners to purchase new equipment.	Designed in collaboration with Fox Studios.
SCS		1955	Another effort to promote a new film type. The SCS camera used a 55.625mm film. The camera was just a modified version of the BNC model. SCS stood for Super Cinemascope, which was a reference to the new film type.	Was only used on one or two features.

Table 1 (Continued)

Mitchell Camera Model History

Camera Model	Additional Versions	Date	Description	Notes
R35	Mark I, Mark II, S35R, S35RB	1950s, 1962 (Mark II), 1965 (S35R), 1974 (S35RB)	The R35 and subsequent models were Mitchell's attempt to create a reflex viewing hand-held camera. The S35R and later models replaced Mitchell's early Standard, High Speed, and NC models.	
SSR16	DSR16	1963	CBS commissioned Mitchell to design a 16mm news and documentary camera. The camera was light weight and contained RCA built in sound components.	Collaboration with CBS and RCA
NCR/BNCR		1967	The NCR and BNCR were modifications of the NC and BNC cameras using Mitchell's new reflex viewing technology. This eliminated the need for John Leonard's Rackover device.	
R-16-S	Mitchell/Wilcam W-2-4	1974	Originally manufactured by Wilcam in 1973. Used Auricon magnetic sound heads. Used Mitchell's reflex viewing technology.	
Projectors				
MPRPP		1939	The Mitchell Pin Registered Process Projector was a background plate projector used for special effects. The advanced design won the company an Academy Award in 1939 for its use in Gone With the Wind.	The MPRPP used a version of the NC's revolutionary quiet camera movement allowing it to run on set without interfering with filming.

4. Mitchell Camera Factory

The Fox-Case Company erected a new factory building for the Mitchell Camera Corporation in 1929. Located at 661 and 665 North Robertson Boulevard (also currently addressed as 648-652 North La Peer) in what is now West Hollywood, the structure was made of Truscon steel and cost nearly $260,000.[35] The camera manufacturer needed the new space to keep up with rising demand for their products. At the time, the area around the Mitchell Camera Corporation factory was fairly vacant, dotted by lumberyards and various industrial sites. Mitchell's new factory was part of a developing industry focused on the evolving technology needed to produce films.

[35] *"Company Will Make Camera in New Plant."* Los Angeles Times, *March 10, 1929, p. E9.*

Mitchell continued to maintain and manufacture cameras from the Robertson Boulevard location throughout the 1930s. Only a few months before the Japanese attacked Pearl Harbor, the Mitchell Camera Corporation was awarded a defense contract worth nearly $30,000. The U.S. Army's Signal Corps used Mitchell BNC cameras for in-studio productions as well as the Mitchell SS, which was a modified NC model with a built in sound recording galvanometer. In 1940, shortly before they were awarded the defense contract, Mitchell expanded the factory adding an office building near Robertson Boulevard.

After the war ended, the Mitchell Camera Corporation purchased a former automotive factory in Glendale and left the Robertson Boulevard location.[36] It continued to produce the popular BNC camera, selling to Warner Brothers and other major studios as well as selling fourteen cameras to Russia. While the NC/BNC remained a popular model, Mitchell continued to develop new cameras, including portable hand-held models like the R35 developed in the 1950s. Mitchell would go on to win two more Oscars while operating out of Glendale. In 1966 they won for their Mark II portable camera and in 1968 they took home an Oscar for the Todd-AO hand-held motion picture camera.[37]

5. Factory Architecture

Architect Albert Kahn, who founded Albert Kahn Associates in 1895, developed a new factory construction methodology that replaced wood with concrete. The use of concrete allowed for wider spans and fewer vertical columns, allowing factory floors more unobstructed space creating more opportunity for production spaces. Also, concrete helped reduce the threat of fire, which was a constant concern in the former wood factories. The Packard Motor Company factory constructed in 1907, in Detroit, Michigan, was an early example of this construction method. Kahn also designed factories for Ford Motor Company in 1909 at Highland Park, Michigan, and the half-mile long Ford factory at River Rouge in Dearborn, Michigan, constructed in 1917. At the time of its completion the River Rouge Ford factory was largest manufacturing complex in the United States.

While visionaries like Kahn and other architects helped transform the factory building type during the early twentieth century by using new construction materials and technology, it was the Modern Movement in Arts and Architecture that re-envisioned how Modern design could improve both production, and the daily work conditions for workers in the factories. Although it appeared earlier in Europe, the Modern factory in the United States was largely constructed during the post World War II era. The factory used Modern Movement design principles, which included the primacy of light, space, function, structure, and industrial materials, to determine design decisions. The use of important Modern components such as glass walls, corner windows, and visible structural members unified the various factory buildings.[38] One of the most important design aspects of Modern factories was that there no longer was a strict architectural hierarchy of design elements, which formerly was the case in much of the early twentieth-century factories. No longer did factories have a street-fronting formal façade and a utilitarian warehouse production space as they did in the early 20th century, rather, Modern manufacturing plants had a "total design" where the exterior, interior, and in some cases the furnishings throughout the facility were all part of a unified design.

---

[36] *"Kinner Motor Plant Sold," Los Angeles Times, April 6, 1946, p. A8.*

[37] *Academy Award Database, The Academy of Motion Picture Arts and Sciences, Web. 4 June 2014. http://www.oscars.org/awards/academyawards/index.html*

[38] *Leonardo Benevelo, History of Modern Architecture (Cambridge: The M.I.T. Press, 1977), p. 428.*

a. Industrialization and Prefabrication

Prefabrication was a product of the industrial revolution and the development of new manufacturing techniques like Henry Ford's assembly line. If a manufacturer could increase the efficiency of automobile production using standardized parts, the same could be done for other industries. The earliest ideas concerning prefabricated buildings imagined the use of cast iron as the primary material. "Cast iron was then the prime machine age material, the foundry the seat of mass production."[39] However, prefabricated cast iron building materials never really gained popularity due to the high weight and the materials high heat conductivity.

Concrete became the next revolutionary material on the prefabricator's list. In 1908 Thomas Alva Edison began experimenting with the idea of precast concrete for the construction of inexpensive homes. Edison was not the only inventor thinking about prefabricated concrete, however due to his fame, his attempt to design a prefabricated concrete home continues to be cited as the beginning of prefabricated construction in the United States.[40] The early twentieth-century was an era of experimentation with concrete. Successful endeavors with onsite concrete construction include Irving Gill's La Jolla Women's club and Rudolph Schindler's Kings Road House. Both projects demonstrated concrete's feasibility as a construction material.

The 1920's saw the addition of the steel frame in prefabricated construction. "Any use of steel—weather or not prefabrication is the objective—enters the prefabrication picture because steel, unlike wood, is not adapted to cutting or fitting at the site."[41] Albert Kahn and his brother Julius combined concrete with steel frame construction in their factory buildings creating fireproof structures ideal for the industrial setting.

b. The Truscon Steel Company

The factory building at 661-665 Robertson Boulevard/648-652 N La Peer Drive was built in 1929 by the Truscon Steel Company, based in Youngstown Ohio. Julius Kahn, brother of famous industrial architect Albert Kahn, had previously patented his "fireproof Kahn concrete tile system."[42] In 1907 Julius established the Truscon Steel Company, originally known as the Trussed Concrete Steel Company, applying his ideas to prefabricated industrial structures. Kahn's system "consisted of rolled bars with 'wings,' which were sliced and bent up at regular intervals". The company offered an assortment of products combatable with the "Kahn System" and was instrumental in Albert Kahn's design for the Packard Motor Plant in 1910. As the company grew, Truscon began offering complete factory buildings in a variety of sizes and styles with an assortment of potential uses such as gas stations, bunkhouses, warehouses and factory buildings. The company operated a number of branch offices found throughout the country including one located at 1480 East 4th Street in Los Angeles. "Through any of these offices you can obtain the services of a complete engineering force and of specialists in the economical application of Truscon Products."[43] In 1927 the

[39] *Alfred Bruce and Harold Sandbank, A History of Prefabrication (Raritan, N.J: John B. Pierce foundation, 1945), p. 30.*

[40] *Ibid., p. 31.*

[41] *Ibid., p. 42.*

[42] *Ryan Salmon, Meghan Elliot, "The Kahn System of Reinforced Concrete: Why it Almost Mattered," Structure Magazine, April 2013, p. 9.*

[43] *Ibid., p. 47.*

company reported over $30 million in product sales and decided to expand its operation by adding a Los Angeles plant to their inventory.[44]

The entire structure at 661-665 Robertson Boulevard/648-652 N La Peer Drive consisted of Truscon made materials, from the Truscon wire mesh reinforced concrete floors to the Truscon steel windows to the Truscon standardized structural steel trusses and interlocking steel roofing.[45] The sidewall panels could be pressed in a variety of patterns, providing a personal touch for the building owner. Although Truscon buildings were prefabricated, they were intended to be permanent structures, designed to last for many years. The designs were created by professional engineers and overseen by experienced builders.

6. 661-665 Robertson Boulevard/648-652 La Peer after the Mitchell Camera Corporation

The subject property served a variety of purposes after the Mitchell Camera Corporation moved out in 1946. The building served as a furniture factory and military surplus facility before being abandoned for a short time. In 1951 a fire destroyed the neighboring plastics factory and damaged a nearby drug company. The old Mitchell factory sustained minor damages from the blaze (**Figure 9**).[46]

In 1967 the old factory gained new life when Ron Buck, a lawyer, architect and artist, bought the space converting it into a nightclub. He called it "The Factory" attracting many A-list celebrities during its run. Buck operated The Factory on behalf of a board consisting of Paul Newman and Sammy Davis Jr among others. The club was a discotheque exclusive to members only. It was popular among Hollywood and Los Angeles elites, competing with Club John, Arthur, The Daisy, and The Candyshop.[47]

The Factory closed its doors in 1972, giving way to a family style Italian restaurant called Spaghetti Village (**Figure 10**). "Dinners are served in such fun settings as a jailhouse, fire house, dry goods store, mayor's office, etc., identified by barber poles, fire pumps, or sometimes just by signs."[48] Patron's had the choice of ten different sauces for their bowl of spaghetti. A penny arcade provided entertainment to customers, both young and old.

The Factory continued to be reinvented, including being transformed into a disco club that catered to gay men. By 1975, Scott Forbes, an optometrist from Boston Massachusetts, opened and operated Studio One, one of the largest gay nightclubs in the West Hollywood area.

The occupancy history of the subject property is summarized in Table 2 below.

---

[44] *"Steel Plant Site Bought," Los Angeles Times, April 22, 1927, p. A1.*

[45] *Ryan Salmon, "The Kahn System of Reinforced Concrete," p. 17.*

[46] *"Four Concerns Hit By $300,000 Blaze," Los Angeles Times, August 9, 1951, p. 30.*

[47] *John Hallowell, "Every Shift Swings at The Factory," Los Angeles Times, September 15, 1968, p. A22.*

[48] *Louis Dwan, "Roundabout," Los Angeles Times, October 24, 1973, p. D5.*

Table 2

History of Occupancy for 648 La Peer

Date	Owner/Establishment	Notes
1929	George Mitchell and Henry Boger, Mitchel Camera Company	Fox-Case Company built a factory for the Mitchell Camera Corporation at 648 La Peer in 1929. In 1941 the company expanded their operation and then in 1946 they moved to 666 Harvard Ave in Glendale (Formerly the Kinner Motor Plant).
1946	Military Surplus Storage, Furniture Factory	"The West Hollywood factory then became the Veteran Salvage Depot, a processor of military salvage. There is little on record about this facility, but it made the LA Times in 1951 when a fire damaged it and adjacent factories. The building subsequently became a furniture factory but was abandoned sometime in the 1960s." (Gustave Heully, *Ever Wonder: Was the Factory a Factory?* Wehoville.com. 9-23-2013.)
1967	Ronald Buck, The Factory	Buck purchased the property at 648 La Peer in 1967 and converted the plant into a night club named The Factory. Buck operated The Factory on behalf of a board consisting of Paul Newman and Sammy Davis Jr among others. The club was a members only discotheque. It was popular among Hollywood and Los Angeles elites, competing with Club John, Arthur, The Daisy, and The Candyshop. (John Hallowell, LA Times, 9-15-1968)
1972	Spaghetti Village	A family theme restaurant. Spaghetti Village offered a variety of pasta and sauce combinations. The interior was organized like a small town with dinner being served in the Jail house, firehouse, and even the mayor's office. (Lois Dwan, LA Times, 10-24-73)
1975	Studio One	Owned by Steve Forbes, Studio One was one of the first clubs to cater to gay men. However, the exclusive nature of the club caused the LGBT community to view the club in a somewhat negative light. (Lillian Faderman, Stuart Timmons, Gay LA: A History of Sexual Outlaws, Power Politics, and Lipstick Lesbians, 2006)
1988	The Rose Tattoo	Opened by lesbian entertainer Linda Gerard who continued to use the building as a night club. She added a restaurant and piano bar to the site but closed after five years of operation. (Gustave Heully, Ever Wonder: Was the Factory a Factory? Wehoville.com. 9-23-2013.)
1993	The Factory	In 1993, Sandy Sachs took over the site. The Factory remained a dance club catering to crowds of all kinds. (Gustave Heully, Ever Wonder: Was the Factory a Factory? Wehoville.com. 9-23-2013.)

Figure 9: 1951 Fire on Robertson. The Mitchell Factory can be seen in the distance, to the right of the blazing plastics factory.[49]

Figure 10: An advertisement for the family friendly Spaghetti Village.[50]

[49] *Web. 20 June 2014. http://imagizer.imageshack.us/a/img27/5831/aabone1951fire.jpg*

[50] *Gustave Heully, "Ever Wonder: Was the Factory a Factory?" Wehoville, September 23, 2013. Web. 17 June 2014.*

7. Studio One and the LGBT Community

a. History of Gay Meeting Spaces

Prior to 1973, homosexuality (a term used to define the broader system for classifying sexual types) was considered a mental illness by American psychoanalysts.[51] The outward approval or display of affection toward the same sex, whether it was kissing or holding hands, was considered obscene and changeable if given the right motivation. Laws designed to control and, or penalize the gay community included those that banned lesbian and gay foreigners from entering the country in 1952; military sanctions that prevented them from serving in the armed forces during World War II; and laws that prohibited the sale of alcohol to homosexuals – on the books as late as the 1970s.[52] These and other laws may not have deterred the LGBT community from finding ways to express their freedoms, but they did hinder the visibility of that expression well into the late 1970s. Early on, to evade the penalty of such laws, gays met in saloons attached to hotels until industry made way for the building of bars and taverns. American bars and taverns were a more suitable solution for meeting and gathering in the burgeoning urban environment. Hotels and parks also remained viable options for social connections between homosexuals, but bars became more common as the need for shared identity and privacy increased.

Bars for homosexuals as well as heterosexuals were places where networks were put in place and where freedoms were unabashedly explored, which made them just as much of a target for harassment than if they were out in the open. Local officials supported police entrapments which insured that homosexuals would be caught in various offenses. Up until the late 1970s and early 1980s, the LGBT community struggled against an overtly hostile social climate. Any bar that was gay or gay-friendly was harassed by the local police to the extent that owners found ways of warning their patrons of impending police raids. There were lights placed in the middle of dance floors that would blink on and off, giving them time to disperse or grab a female partner. This tactic was not exclusive to gay establishments; straight bars and nightclubs used this and other warning signals during Prohibition. For gay men and women, those early warnings could mean the difference between an inconvenient interruption and physical abuse deemed an "accident" at the hands of the arresting officers. Owners of bars where gays frequented, whether they were gay or straight, remained as low key as their gay clientele for fear of harassment. If the local authorities were even suspicious of homosexual activity, they would revoke liquor licenses, inflate fines, demand pay-offs in the form of sex (with lesbian patrons and/or bar owners), or use physical force to carry out the legal and social restraints put on homosexuals and their public meeting places. In 1967, the Tavern Guild of Southern California (an association of gay bar owners) reported nightly raids on gay bars beginning New Years Eve. In some instances they even brought charges against the officers for brutality.[53] In Los Angeles, the LAPD were known to be especially punitive in their treatment of homosexuals. As a result, a long and unsavory relationship between the LGBT community and the police formed, forcing the LGBT community into confrontations and pushing them more into unincorporated areas.

Gay and gay-friendly bars attracted unconventional freethinkers like artists, writers, poets, musicians, and of course gays (another bohemian lifestyle in the early bar scene); they were "Beatnik bars." For the safety of the patrons and for the sake of the bar, gay or gay-friendly establishments were not outwardly advertised as

[51] *History Timeline of LGBT Events. http://www.ct.gov/dcf/lib/dcf/wmv/pdf/timeline_of_lgbt_history.pdf. (accessed 9/14/14)*

[52] *Gay and Lesbian Bars. Encyclopedia of gay, lesbian, bisexual, transgender, and queer culture - Social Sciences. http://www.glbtq.com/social-sciences/gay_lesbian_bars,2.html. (accessed 9/15/14)*

[53] *Len Evans. Gay Chronicles. http://gayinsacramento.com/Chron1-Calif-page.htm. (accessed 9/16/14).*

such before the Stonewall riots in 1969 (discussed below). The only way that people knew an establishment was a gay bar was because someone had told them. Their access was sometimes cloaked; windows were painted or there were few to none, and there were rear and side entrances. During Prohibition (1920s), gay bars were similar to heterosexual speakeasies; they were not highly regarded and gave patrons a secluded place to meet. In the U.S., Prohibition transformed public drinking and social constructs in the gay bar scene as well as in the straight. The wall between gay men and women began to crumble. More mixed gender and unbiased bars emerged where they had previously been male-dominated and role biased. Beginning in the late 1970s, bars became bold social hubs for the once restrained, gay or straight. At the same time, homophile organizations, festivals, clubs, bookstores, and magazines like ONE became the new system of political communication. The LGBT community began to make bolder and more radical stances, increasing their visibility and the divide between straight and gay establishments; bar owners and businesses marketed themselves as gay-friendly or strictly gay, partnered with civil rights organizations such as the ACLU, and designed or rehabilitated their establishments to cater to the gay culture. Tremendous amounts of money flowed into the bars and the communities that surrounded them because of this.

b. The Modern Gay Rights Movement

In 1950, during the Cold War, the "lavender scare" described the phobia that led to gay men and women being discharged from the military based on a U.S. Senate report that stated that homosexuals were a security risk to the nation because of their perverse acts and emotional instability compared to a "normal" person. Based on the same report, Executive Order 10450 banned homosexuals from working in the Federal Government or with any of its private contractors in 1953.[54] There was no consensus in the United States, but in 1961 Illinois became the first to decriminalize homosexual acts between consenting adults in private, repealing long held sodomy laws.[55]

Although the LGBT community remained undercover in their political activism, there were individual and small group stands against discrimination taking place throughout the country, even before the riots at the Stonewall Inn in 1969. For instance, the riot at the Black Cat Tavern on Sunset Boulevard near Silver Lake in 1967 was a result of a raid by the Police Department on the Black Cat and New Faces bar which left many patrons and employees injured. The raid prompted a demonstration organized by PRIDE (Personal Rights in Defense and Education). The same year, the Tavern Guild of Southern California (an association of gay bar owners) reported nightly raids on gay bars that began with New Years Eve, and in some instances brought charges against the officers for brutality.[56] Despite this and other outspoken acts, the LGBT community remained marginally repressed and ostracized.

Organizations like the Homosexual Law Reform Society and the New York Chapter of Daughters of Bilitis, coupled with the post-Vietnam free-love campaign, the 1960s youth counterculture, alternative publications like the Pride newsletter, and pro-gay organizations like ONE, made homosexuality slightly less taboo. After a lengthy battle with activist Franklin Kameny and others, and based on the findings of Eveyln Hooker, the American Psychiatric Association finally removed homosexuality as a mental disorder from their handbook in 1973. It took California until 1975 to repeal their sodomy laws; incidentally this was the same year that

[54] *History Timeline of LGBT Events. http://www.ct.gov/dcf/lib/dcf/wmv/pdf/timeline_of_lgbt_history.pdf. (accessed 9/10/14); Timeline: Milestones in the American Gay Rights Movement. PBS. http://www.pbs.org/wgbh/americanexperience/features/timeline/stonewall/. (accessed 11/15/13).*

[55] *Ibid.*

[56] *Len Evans. Gay Chronicles. http://gayinsacramento.com/Chron1-Calif-page.htm. (accessed 9/10/14).*

Scott Forbes opened Studio One in West Hollywood. It took until 1982 for Wisconsin to become the first state to outlaw discrimination on the basis of sexual orientation.[57]

Gays supported causes such as women's liberation and racial equality in the 1960s, but their efforts were more grassroots and localized. It took something major, like the Stonwall riots, to galvanize the gay political consciousness and bring individuals (including non-gays) from various cultural, political, and religious groups together as one community. Many came to believe that "when the Stonewall riots in the summer of 1969 ended, the [gay rights] movement began."[58] The same summer of 1969 the Gay Liberation Front (GLF) was formed. The GLF was soon followed by the Gay Activists Alliance (GAA), which later became the Gay and Lesbian Activists Alliance. As a direct result of seeing the battles won against the injustices of others, gays gained courage to become more outspoken and determined to strategically organize against discrimination. Others credit Prop 6 (the Briggs Initiative[59]) and the anti-gay campaign that Southern Baptist gospel and pop singer Anita Bryant led in the late 1970s as the catalyst for change. Some saw the 1980s AIDS crisis that claimed many lives and limited the social freedoms of gays as the catalyst for community action.

In Los Angeles the gay rights movement was as varied as the California topography. In the aftermath of the incidents mentioned above it took skillful leadership to bring the various groups together, but they were more energized to work together for change than ever before. Other entities were drawn to the gay rights movement as well; African Americans, celebrities, and even the Metropolitan Church would come together for the cause of gay equality as if their own rights were at stake.

Grassroots organizations within the gay community sought a more radical approach to achieving equality while conservative groups argued for a more civil approach. In the 1970s the LGBT community focused its efforts on gaining political power and promoting their civil rights where before they were much more concerned with remaining low-key. At the 1972 Democratic National Convention, five of the delegates were openly gay. That number jumped to seventy-seven by 1980, and in 1984 gay civil rights became an official item on the party's agenda.[60]

The group MECLA (Municipal Elections Committee of Los Angeles), formed in 1976 and comprised of 14 professional men, was one such organization. It was the first political organization in the United States to give money to gay-friendly political candidates even though some of its members were not yet "out." Between 1977 and 1980, MECLA grew and helped legitimized the issue of gay rights. It raised money by mostly hosting luncheons that were well attended by wealthy supporters. A member of the board of MECLA, Sheldon Andelson was a criminal defense attorney who owned one of the biggest bathhouses in the city.

---

[57] *Li Fellers. "Museum will tell history of gays. Homosexuals see boost to culture, greater visibility." Chicago Tribune. March 11, 2004. (accessed 11/19/13); Timeline: Milestones in the American Gay Rights Movement. PBS. http://www.pbs.org/wgbh/americanexperience/features/timeline/stonewall/. (accessed 9/15/14).*

[58] *"The Gay Rights Movement." American Social Reform Movements Reference Library. Ed. Carol Brenan, et al. Vol. 1: Almanac. Detroit: UXL. 2007. 191-218. U.S. History in Context. Web. 7 July 2014. <http:ffic.gagl roup.comficfuhicfReferenceDetailsPagef ReferenceDetailsWindow?f it;Type=&query=&prodld=UHIC&windowstate=normal&contentModules=&display-query=&mode=view&displat!{roupName=Reference&limiter=&currPage=&disableHighlighting=false&displayGroups=&sortBy=&search_within_results=&p=UHI(]&action=e&catld=&activity'I)Ipe=&scanld=&documentld=GALE/CX2SB710001S&source=Bookmark&u = usocalmain&jsid=Sa04a931c64472Se1d32503cjb42d9cc>.*

[59] *The Briggs Initiative, which was on the California ballot in November 1978, would have banned gays and lesbians from working in California's public schools. The initiative did not pass.*

[60] *Ibid.*

Diane Abbitt was one of the first women to join the organization in the mid-1970s, further breaking down the walls between gay men and women.

c. Gay Rights Movement in West Hollywood

West Hollywood was formerly known as the town of "Sherman" after its founder, Moses H. Sherman of the Los Angeles Pacific Railroad Company. "Sherman" was an unincorporated and less restricted area than Hollywood or Los Angeles, and beyond the jurisdiction of the Los Angeles Police Department. Founded in the late 1890s, its residents were mostly working-class employees of the railroad and some movie actors who were accommodated in affordable housing. In the 1920s, silent movie benefactors were living lavishly in the adjacent areas of Hollywood and Beverly Hills, but they came to the unincorporated town of "Sherman" to the bars and gambling halls that were built next to the workers homes. Older clubs such as Ciro's (now the Comedy Store) held gay dance nights known as "Tea Dances" on Sundays. Other nightclubs sprung up along Sunset Boulevard such as the Mocambo, the Trocadero, and the Garden of Allah (built by lesbian actress Alla Nazimova) which catered to the movie industry surrounding "Sherman." At these places gambling was legal, movie stars were regulars, and gender and sexual roles were bent without penalty.[61] "The Los Angeles County Sheriff's Department was more lax in policing homosexual behavior and regulating bars and nightclubs catering to LGBT persons. This permissiveness allowed for the gradual ascendency of West Hollywood as the fulcrum of the LGBT community during the late 1960s and 1970s."[62]The list below shows the early incorporation of surrounding cities, making West Hollywood not only the last to be incorporated in 1984, but the last to revel in the freedoms that came with it.

City:	Developed:	Date Incorporated:	Annexed TO Los Angles:
Santa Monica	1875	1887	
Hollywood	1887	1903	1910
Glendale City	1887	1906	
Burbank City	1887	1911	
Beverly Hills	1906	1914	
Culver City	1913	1917	

Although gays and lesbians were not as open as they would be later on and continued to face discrimination, the 1970s were a decade of sexual freedom, not just in West Hollywood, but also in the U.S. The decade of the 1970s was a time of political transition – citizens trusted the private sector more than the government, and politics were aimed to promote privatism. There was also a rise in contempt and mockery of authority as seen in the weekly satire of Saturday Night Live. Liberation trumped older notions for decency and even non-hippies that formerly embraced civility and restraint embraced a looser code of conduct. West Hollywood has always "promoted a brotherhood of pleasure as a statement of gay liberation."[63]

In the aftermath of Stonewall the gays of West Hollywood became activated - if only under the surface until Propostion 6 fanned the political flame and the AIDS pandemic brought a community of diverse backgrounds

[61] *Dave Ockun. About Hollywood.com. "West Hollywood." November 15, 2010. http://www.abouthollywood.com/hollywood-neighborhoods/west-hollywood/. (accessed 9/15/14); Gay West Hollywood.com. "How Did West Hollywood Become So Gay Friendly?" September 2014. http://www.gaywesthollywood.com/history.htm. (accessed 9/15/14).*

[62] *SurveyLA LGBT Historic Context Statement, Prepared by GPA Consulting, Carson Anderson, and Wes Joe for the City of Los Angeles, Department of City Planning, Office of Historic Resources, September 2014. 58.*

[63] *Lilian Faderman, Stuart Timmons, Gay L.A.: A History of Sexual Outlaws, Power Politics, and Lipstick Lesbians, (New York, NY: Basic Books, 2006), p. 231.*

together. Business in West Hollywood such as the Big Weenie hot dog stand and the All American Boy clothing store along Santa Monica Boulevard catered to homosexual men. Each bar was known for one thing or another. Spike was a bar frequented by men who wore all leather; Circus Disco and Studio One were known for their all-night dancing. There were bars and clubs such as Revolver, Blue-Parrot (now Flaming Saddles), Mother Lode, Gold Coast, Micky's, and Rage that also had their specialties.

A typical night in West Hollywood might look like this: head to "boys town" alone or with a group of friends – "boys town" was the San Vicente and Robertson corridor/west end of Santa Monica Boulevard where the highest concentration of gay bars were and still are; park along Santa Monica Boulevard and hit as many clubs and bars depending on your mood or the mood of whoever you were with at that particular moment in time. If you wanted to cool down after dancing all night you headed over to the Mother Lode (still exists) or the Revolver Video bar (re-opened). If you wanted to go for drinks afterwards, you headed over to the Blue Parrot (now closed). Places that contributed to the social scene of the gay culture in Los Angeles and the West Hollywood area include the many local bathhouses, and the picnic grounds at Griffith Park – the site of one of the first "gay-ins" in 1968. As popular as the popular bars were in West Hollywood there were other low-key bars like The One on Melrose near Poinsettia or On the Boulevard that contributed to the popularity of West Hollywood.[64]

Bars like Studio One were not welcoming to African Americans or Latinos, and as a result gay nightclubs like Jewel's Catch One, located in the mid-Wilshire district, and Circus Disco in Hollywood were built.[65] Jewel's Catch One was smaller than Studio One and Circus Disco, but it was the first large-size gay disco in the United States at the time of its construction for African Americans. Circus Disco, another a popular dance venue, was comparable in size to Studio One and is still in operation. The younger crowd, who were not old enough to get into Studio One or Circus Disco, went to the Odyssey.

When the City of West Hollywood was incorporated in 1984, it continued to welcome gays with greater transparency that opened the market for gay bars and nightclubs, including Studio One, which was developed by Scott Forbes in 1975 (**Figure 11**).

d. Scott Forbes and Studio One

Scott Forbes was a former optometrist and graduate of the University of Southern California. After relocating from Boston Massachusetts, Forbes gave up his optometry practice to pursue the night club business full time. Forbes was also candidate for City Council after the city was incorporated in 1984.[66] It was no secret that Forbes was opening Studio One as a gay nightclub intent on celebrating the sexual freedoms of gay men. Forbes opened Studio One in an industrial warehouse that formerly housed the Mitchell Camera Corporation. After its transformation, it resembled the warehouses found in artistic industrial districts popular across the country.

Studio One was one of two large gay bars/clubs in Los Angeles (**Figure 12)**. The other, Circus Disco, welcomed a variety of people while Studio One attracted more of a homogeneous crowd that appealed to the

[64] *Based on oral interviews.*

[65] *Kai M. Green. KCET. "Catching the Incurable Contagion: Black Los Angeles' Disco Queers." May 20, 2013. http://www.kcet.org/arts/artbound/counties/los-angeles/los-angeles-disco-queers.html. (accessed 9/16/14); ICF/Jones &Stokes. SurveyLA. LGBT Historic Context Statement. Fifth draft, p. 62. September 12, 2014. (accessed 11/5/14).*

[66] *Jon Thurber, "Obituaries; Scott Forbes, 57; Ran Dance Palace," Los Angeles Times. February 7, 2002, p. B.15.*

gay white male with expendable dollars. Some LGBT activists believed Studio One club-goers displayed the wrong priorities, choosing to party rather than promote the LGBT community's cause. They looked down on the club for promoting stereotypes, referring to the patrons as "disco bunnies—blond, built, and brainless."[67] There was even a "no open-toe shoe" policy in its beginnings, letting women know that they were not necessarily banned, but they were not encouraged.

It wasn't until later that Forbes realized he had something to contribute to the modern gay movement. This was true for most gay bars opening in the late 1970s and early 1980s. Although Forbes would later turn some of his club's proceeds over to support gay causes and hold fundraisers, accusations of racism and sexism plagued Studio One's reputation, inciting a decade of protests on the club's front steps and further alienating the LGBT activist community.[68] Studio One closed in 1988 and reopened as the Cherry Pop and then Suede–The Factory in 2009/2010.

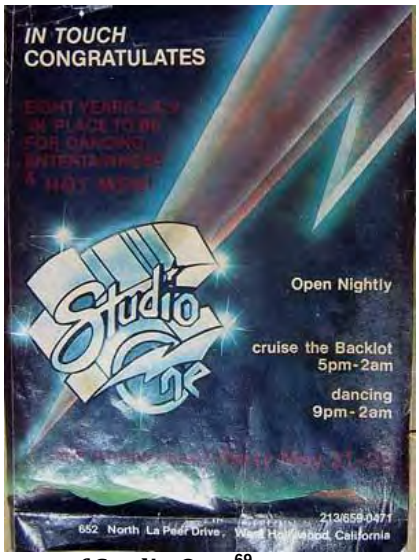

Figure 11 (Left): Scott Forbes, owner of Studio One.[69]
Figure 12 (Right): Advertisement for Studio One.[70]

B. HISTORIC RESOURCES IDENTIFIED

1. Known Historical Resources in the Project Vicinity

The historical resources investigation included records searches and review of local histories to determine: (i) if known historical resources have previously been recorded within a 0.50-mile radius of the Project Site; (ii) if the project site has been systematically surveyed by historians prior to the initiation of the study; and/or (iii) whether there is other information that would indicate whether or not the area of the Project Site is historically sensitive or the project may pose indirect impacts to adjacent historic resources. PCR consulted the National Register of Historic Places (National Register), California Register of Historic Places (California Register), California Historic Resources Inventory (HRI), California Points of Historical Interest (PHI), California Historical Landmarks (CHL), and the City of West Hollywood's Cultural Resource Map to

[67] *Faderman and Timmons, Gay L.A., p. 237.*

[68] *Ibid.*

[69] *Discomusic.com. Web. 3 July 1914. http://www.discomusic.com/clubs-more/6800_0_6_0_C/*

[70] *Ibid.*

determine previously identified historical resources within an approximately 0.50-mile radius of the Project Site. For greater detail on Previous Evaluations, see the results of the records search in Appendix B.

A summary of historical resources identified within the Project vicinity is provided in **Table 3 in Appendix C**, *Previously Recorded Resour*ces within 0.50-Mile of Project Site. A total of 57 resources have been previously recorded within the study area. However, the project site would be visible from only one (1) of these resources, the Boy Scouts of America Clubhouse (built 1920) located south of the project site at 623 N. Robertson Boulevard, which would have a distant view of the Project.

2. Previous Evaluations of the Project Site

The Mitchell Camera Manufacturing Company is included in the OHP's HRI (P-176819) and was assigned a CHR Status Code of 3S "Appears eligible for National Register as an individual property through survey evaluation."

In 1986 Johnson Heumann Research Associates conducted a citywide historic resources survey on behalf of the newly incorporated City of West Hollywood and the State of California's Office of Historic Preservation. The *1986-87 Citywide Survey* was intended to aid city officials draft the community's first General Plan by identifying existing resources with the potential for historic designation. Johnson Heumann Research Associates found, based on a reconnaissance-level survey, that the subject property "may" be considered eligible under what the survey identified as category 5: "worthy of consideration under a future local ordinance." When the survey was conducted, the City of West Hollywood had not established its criteria for the designation of cultural resources.

In January of 1995 the City of West Hollywood's Cultural Heritage Advisory Board reevaluated the property located at 665 Robertson Boulevard/652 North La Peer Drive. Based upon written and oral evidence the board recommended denial of the designation of the structures as local cultural resources. The Cultural Heritage Advisory Board found that although the structure at 665 Robertson and 652 N La Peer once housed an industry important to the city and region, the structure itself did not contribute towards that importance. Furthermore, significant alterations to the interior and exterior of the building left it lacking integrity of location, design, feeling, or association.

Since the time of the Cultural Heritage Advisory Board's review the City of West Hollywood has not designated the building at 661-665 Robertson Boulevard and 648-652 N La Peer (Identified as 652 N La Peer in the survey) as a cultural resource under any of established criteria.

3. Evaluation of Historical Resources: 661-665 Robertson Boulevard and 648-652 North La Peer Drive, APN: 4336-009-007 (Project Site)

The survey process undertaken for the purposes of this evaluation was conducted per California Office of Historic Preservation (OHP) instructions, which gives a 45-year threshold for surveying properties for significance,[71] as well as National Register guidelines.[72] During the current survey, 661-665 Robertson

[71] *The 45-year criterion is a broad threshold that recognizes that there is commonly a five-year lag between resource identification and the date planning decisions are made. Instructions for Recording Historical Resources, Office of Historic Preservation, March 1995, 2.*

Boulevard/648-652 N La Peer Drive was identified within the project site and was documented because of the potential to exhibit significance necessary for federal, state, or local designation, pursuant to CEQA. The survey assessed the subject property for its historical and architectural significance against the applicable federal, state, and local criteria for evaluation. A written description, integrity assessment, and a statement of significance for the subject property is provided below. Current photographs are provided in Appendix D.

a. Architectural Description –

Historic Appearance

The factory (**Figure 13**) built in 1929 for the Fox-Case Company and the Mitchell Camera Corporation, is based on Truscon's Flat Roof Type-Series B structures (**Figure 14**). The Series B models were more suitable to wide buildings and offered a larger variety of wall heights. The larger walls meant more windows allowing added natural light essential to the manufacturing of Mitchell Camera mechanisms. The factory matches the series B-Type 3 model with addition of what Truscon called a "Lantern" or clearstory providing additional natural light.[73]

The two-story factory was built on a raised basement and had a roughly T-shaped footprint as shown in Figure 14 and on the Sanborn map detail in Figure 16. Although most of the structure's elements were prefabricated in Truscon's Youngstown, Ohio factory, the fireproof structure was built with permanence in mind. The original construction included a Truscon concrete raised basement and ground floor with wire mesh reinforcement. The entire structure consisted of Truscon made materials including the steel piers that supported the second-floor concrete plates and the standardized steel trusses that supported the interlocking steel roofing. The exterior had Truscon pressed-metal sidewall panels walls, and the building's ample natural light was provided by rows of uniform daylight panel windows for each floor and the sidelights of the lantern/clerestory on the monitor roof.[74] The front of the factory faced east toward Robertson Boulevard and had a wall sign "Mitchell Camera Corporation" attached to the east façade.

The office building (**Figure 13**) was located to the north of the factory and was also oriented facing Robertson Boulevard. The Mitchell Camera Corporation office was built of fireproof reinforced concrete construction except for steel in the floor and roof.[75] The one-story building had a raised basement, and was originally Art Deco in style with architectural ornamentation on the east front elevation just below the roofline. A short parapet wall surrounded the building's flat roof. The front entrance was deeply recessed and had stairs, which led to a second story entrance. Two bridges connected the office to the factory (**Figure 15**).

---

[72] *National Register Bulletin 15: How to Apply the National Register Criteria for Evaluation (U.S. Department of the Interior, National Park Service, Revised for Internet 2002); National Register Bulleting 16A: How to Complete the National Register Form (U.S. Department of the Interior, National Park Service, Revised for Internet 1997); National Register Bulletin 34: Guidelines for Evaluating, and Documenting Historic Aviation Properties (U.S. Department of the Interior, National Park Service 1998).*

[73] *Truscon Catalog, 15.*

[74] *Truscon Steel Company Catalog, Distributed in the 1920s.*

[75] *Sanborn Map 1950*

Figure 13: The Mitchell Factory as it appeared in the 1930s[76]

Figure 14: Example of Truscan's flat roof Series B structure.[77]

[76] *Phillip Zonkel, "Gay history: West Hollywood's The Factory Nightclub used to be a manufacturing facility," Out in the 562, December 20, 2013. Web. 26 June 2014.*

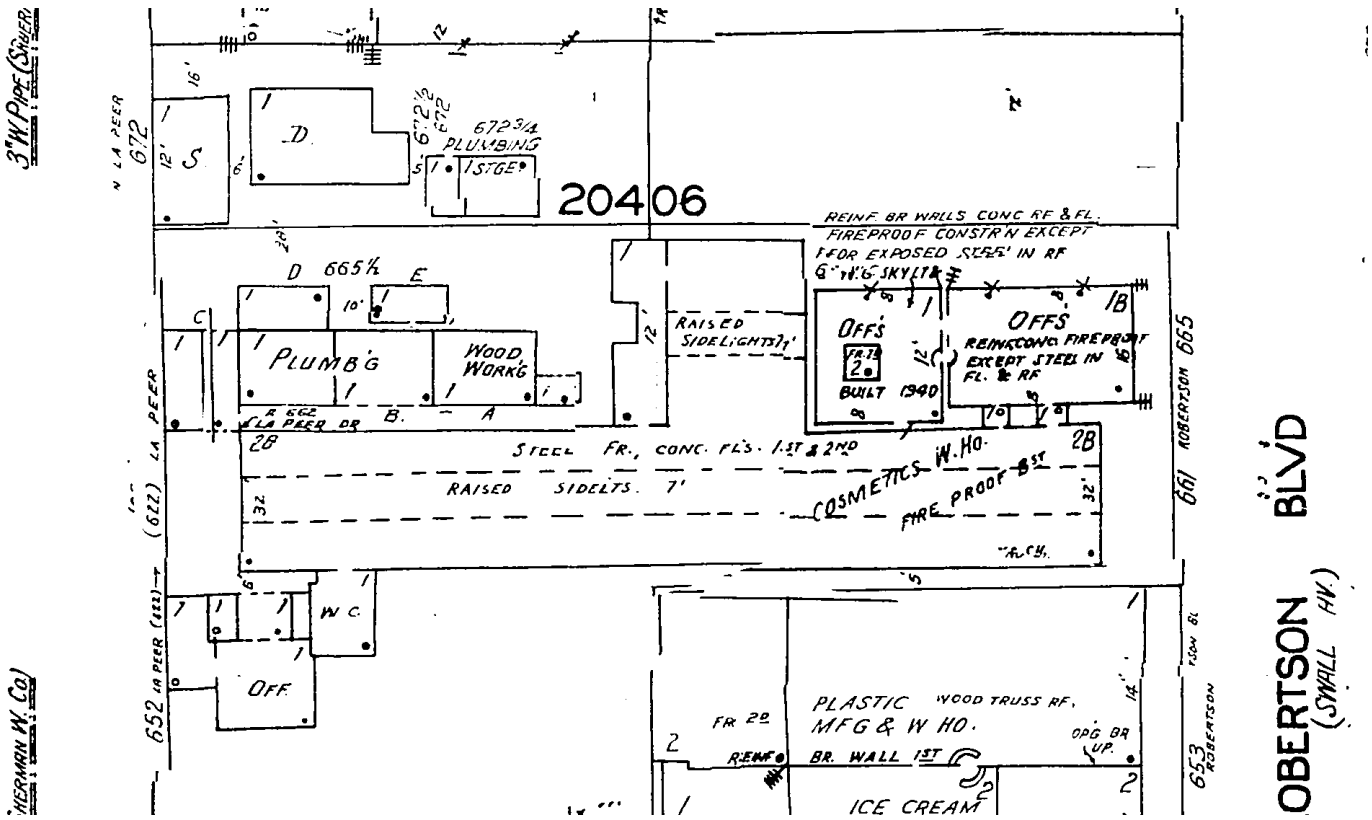

Figure 15: Sanborn Map Detail from 1950 showing footprint of Factory and Two Offices. [78]
The adjacent plumbing and plastic manufacturing buildings are no longer extant, and the small office and WC attached to the southwest corner of the factory has been removed.

Current Appearance

PCR conducted an intensive pedestrian survey of the project site in May 2014, including both the exterior and interior of the three buildings on the subject property. No industrial machinery or parts associated with the Mitchell Camera Corporation is currently located or stored on the project site. The interior is extensively altered for nightclub use and the majority of the interior finishes and features have either been removed, substantially altered or are otherwise obscured by the interior renovations.

The Robertson Boulevard elevation was the primary façade of the subject property, as shown above in Figure 14. The current appearance of the Robertson façade is shown in Figures 17, 18 and 19 in Appendix D. The two-story Truscon Steel building has a board-formed poured-concrete raised basement. (Figure 20 in Appendix D). The building has a roughly T-shaped footprint consisting of prefabricated Truscon materials including steel piers, concrete floor plates, and standardized steel trusses, which support the interlocking steel roofing. The exterior still has Truscon pressed-metal sidewall panels. Uniform daylight panel windows are located on each floor and form the sidelights of the lantern/clerestory on the monitor roof. Several rows of windows on the south, east and north façades have been replaced with non-original incompatible

[77] *Truscon Catalog, 15.*

[78] *Sanborn Map Company, Los Angeles, California Including West Hollywood Formerly Sherman, Volume 20, Sheet 2048, June 1926 with updates in 1950.*

replacement windows. An exterior staircase has been added to the east façade, along with new glass entrance doors. A patio with a concrete block wall and two sets of French Doors provides access to the patio and front entrance.

The office building at 665 Robertson, located adjacent to the factory on the north, (Figures 21 and 22 in Appendix D) has been substantially remodeled in a contemporary style for nightclub use and none of the original Art Deco façade appears to remain. Likewise, the second office building to the west (at the rear) of 665 Robertson is substantially altered and also has been renovated with contemporary materials (Figures 22 and 23). The original fabric and features of the second office building are no longer visible due to the renovations. A secondary entrance to the nightclub's second floor via a new exterior steel staircase and door opening is located on the north side of the building at the second-floor level (Figure 23 and 24). Two metal slider windows were inserted in the metal paneling of the north façade, which are incompatible replacements.

The north wing of the factory has the same 2-story massing with a monitor roof and lantern sidelights as the main factory building (Figures 25 and 26 in Appendix D). There are one-story shed-roofed additions attached to the west side of the factory's north wing (Figure 27). The prefabricated metal paneling and windows on the north side of the factory appears extant (Figure 28).

However, the west front of 652 N. La Peer has been altered with large incompatible glass doors and a projecting canopy (Figure 29 in Appendix D). There is a concrete block wall along the west street front (Figure 30), which continues around the south side of the entrance to create an entrance patio (Figure 31).

Likewise, there have been numerous alterations to the south façade. Several doors and door openings have been added, along with a metal exterior staircase. Some of the original industrial windows along the south elevation have been replaced with incompatible windows, and there is an awning over the entrance to the Fitness Factory LA. There is also a row of incompatible ribbon windows on the upper area of the south elevation near 655 Robertson (Figures 32 and 33 in Appendix D). An adjacent one-story commercial store building is located immediately south of the subject property (Figures 34-35).

The La Peer streetscape is shown on Figure 36; there is a commercial building immediately adjacent on the north. A concrete wall forms the western boundary of the property (Figure 37 in Appendix D).

A long concrete masonry wall protects the Robertson Avenue streetscape, and there are several street trees along the sidewalk (Figures 38-39 in Appendix D).

b. Integrity

The property exhibits a low level of integrity. As a prefabricated industrial facility constructed in 1929, it retains its original location. In addition, the appearance of the subject property indicates that its integrity has been compromised in terms of design, materials, workmanship, feeling, and association due to the alterations of both the La Peer façade and the Robertson façade. While the property exhibits many character-defining features of the Truscon series B-Type 3 model, the addition of new entries, stairways, and changes to windows and building materials impact the structure's overall integrity. The surrounding setting of the property has been substantially compromised by new infill construction and the former industrial character

of the area is no longer extant. The subject property is an isolated example of a prefabricated utilitarian industrial building within the neighborhood context.

The building's alterations also negatively impact the property's integrity as original historic building fabric has already been lost. The property does not appear to meet the high threshold of integrity to be considered for listing on the National Register, California Register, or designation as a West Hollywood Cultural Resource.

C. STATEMENT OF SIGNIFICANCE

The subject property at 661-665 Robertson Boulevard and 648-652 La Peer Drive was designed by the Truscon Steel Company in 1929, and the property meets the 50-year age threshold of the National Register. The project site is currently zoned for commercial use, and contains approximately three (3) improvements constructed between 1929 and 1940. In 1929, the original two-story factory (raised basement) was constructed at 661 Robertson Boulevard, and an adjacent one-story office (raised basement) was built at 665 Robertson Boulevard. In 1940 a second one-story office building was added at the rear (west) of the original 1929 office. The project site is currently occupied by The Factory nightclub, and Fitness Factory LA. There is a surface parking lot on the project site at 648-652 North La Peer, north of the subject building. Today all three of the original improvements remain although they have been substantially altered over the years for subsequent uses. The property was evaluated for its eligibility for listing on the National Register, California Register, and as a City of West Hollywood Cultural Resource.

1. National Register and California Register

The property appears ineligible for the National Register under Criteria A and B, and the California Register under Criteria 1 and 2. Furthermore, due to its lack of architectural distinction and substantial alterations, the property does not appear eligible under National Register Criterion C or California Register Criterion 3. The Project Site is a substantially developed industrial property and is not likely to yield information important in prehistory or history under National Register Criterion D or California Register Criterion 4. The subject property is not a contributor to a historic district that is eligible for listing in the National Register or California Register.

a. Significant Events

National Register Criterion A: Is associated with events that have made a significant contribution to the broad patterns of our history.

California Register Criterion 1: Is associated with events that have made a significant contribution to the broad patterns of California's history and cultural heritage.

The factory building located at 661-665 Robertson Boulevard/648-652 N La Peer Drive has not contributed significantly to events associated with Mitchell Camera development or advancements in camera design influencing the broad patterns of our cultural history and is **not eligible** for listing in **the National Register under Criterion A and California Register Criterion 1.** The period of significance identified for the property under these criteria is 1929 to 1946. This period is based upon the date when the factory was originally constructed, through the end of the Mitchell Camera Corporation's occupancy in 1946. Although the factory building was constructed in 1929 for the production of Mitchell Cameras,

the building contributed little to the development of Mitchell Camera Technology. The Mitchell Camera Corporation's most important contributions to the advancement of camera design occurred outside the factory during the identified period of significance. George Mitchell designed the mechanism for the NC and BNC cameras after he left the company in 1927 and before returning in 1934. In 1934, George Mitchell helped design the Technicolor Three-Strip Camera in Technicolor's Laboratory. The building itself is a generic prefabricated industrial structure and contains no elements essential to the design, production, or maintenance of motion picture cameras.

The former Mitchell Camera Corporation factory is also associated with the local LGBT community. From 1975 to 1988 the facility was used as a dance club, known as Studio One, targeting the gay community. Although the factory building housing the nightclub meets the 50-year age threshold, Studio One does not meet this threshold, and is therefore ineligible for the National Register. Studio One was built at a time when gays were on the brink of collective activism even though some rights activists would distance themselves from the popular nightclub because of the party atmosphere and the stereotypes that plagued it. Events that took place at Studio One included all-night dancing, special concerts given and attended by Hollywood legends. As stated earlier in the historic context, Studio One was one of multiple bars and social institutions (restaurants, night clubs, hotels, and coffee shops) serving the gay community in West Hollywood at the time. The club was not the first social institution to welcome the LGBT community nor was it the longest in operation. Therefore, the night club was not the impetus for the gay-friendly social setting in West Hollywood, which existed prior to its development. The events that Studio One hosted did not make a significant contribution to the broad patterns of our history therefore it appears **ineligible for the National Register under Criteria A and the California Register under Criteria 1.**

b. Lives of Significant Persons

National Register Criterion B: Is associated with the lives of persons significant in our past.

California Register Criterion 2: Is associated with the lives of persons important in our past.

Although George Mitchell appears to be a significant figure in the advancement of film camera technology, the improvements he developed occurred outside of the Mitchell Camera Corporation factory. Therefore the Mitchell Camera Corporation factory appears **ineligible for listing in the National Register under Criterion B and the California Register under Criterion 2.**

When Studio One opened, West Hollywood was already known as a gay-friendly community; one in which members of the LGBT community owned many businesses and sexual freedoms were not penalized as much as in the surrounding areas of Los Angeles. Many clubs of the 1920s and 1940s catered to the entertainment crowd living in Beverly Hills and working in Hollywood. Clubs like the Latin American theme club, Macambo (now demolished) and Ciros (now the Comedy Store) along Sunset Boulevard were frequented by movie starts like Marilyn Monroe and Ginger Rogers, singer like Marlene Dietrich and Eartha Kit, and comedians like Jack Benny. When Studio One came along in the 1970s stars like Cher hosted parties and mingled with regulars. Despite its popularity and contribution to the popularity of West Hollywood, at no point in the building's history was it associated with any significant persons contributing to the history of the nation or state. For this reason, Studio One appears **ineligible for listing in the National Register under Criterion B and California Register under Criterion 2.**

c. Type, Period or Method of Construction, Master Architect/Builder, High Artistic Values

National Register Criterion C: Embodies the distinctive characteristics of a type, period, or method of construction or that represent the work of a master, or that possess high artistic values, or that represent a significant and distinguishable entity whose components may lack individual distinction.

California Register Criterion3: Embodies the distinctive characteristics of a type, period, region, or method of construction, or represents the work of an important creative individual, or possesses high artistic values.

The period of significance identified under this criteria is 1929, the date of construction of the Mitchell Camera Corporation factory. The subject property is an altered, undistinguished utilitarian manufacturing warehouse that is not architecturally significant in the development of early twentieth century factory building design or construction. Mitchell Camera moved out of the factory in 1946 and all three buildings were substantially altered and adapted for subsequent nightclub and fitness club use. The former Mitchell Camera factory in its present condition is not a good example of a prefabricated industrial structure and does not embody the distinctive characteristics of a type, period, or method of construction.

The builder of the subject property, The Truscon Steel Company, was a successful nation-wide producer of prefabricated industrial structures, with production facilities in Youngstown, Ohio and Los Angeles California and satellite offices located throughout the continental United States. Truscon's principle projects were primarily commissions from companies, including the subject plant. Nevertheless, none of Truscon's factories have been recognized as important, notable or otherwise influential in the history of industrial architecture or engineering design. Therefore, the subject property is not a notable work of a master builder, designer, or architect, nor is it a distinctive example of a prefabricated manufacturing plant. Finally, the subject property does not contribute to a potential historic district under these criteria. The facility does not convey its architectural associations from its 1929 period of significance. Furthermore, the surrounding setting on Robertson Boulevard and La Peer Drive has been altered dramatically since the facility was originally constructed in 1929 on the Winnetka Tract and Tract #3585 when it was surrounded by other industrial facilities and open agricultural land.

Therefore, the buildings on the Project Site are **ineligible** for designation under **National Register Criterion C, or California Criterion 3**, as exceptional, distinctive, outstanding, or singular examples of a type, style or method of construction, either individually or as contributors to a district.

d. Potential to Yield Information in Prehistory or History

National Register Criterion D. It yields, or may be likely to yield, information important in prehistory or history.

California Register Criterion 4. Has yielded, or may be likely to yield, information important in prehistory or history.

The subject property is a developed, former industrial site and is unlikely to yield any information important to prehistory or history. Therefore, the buildings on the Project Site are **ineligible** for designation under **National Register Criterion D, or California Criterion 4**, as likely to yield information important in prehistory or history.

2. City of West Hollywood

The subject property does not appear eligible as a local cultural resource under any of the City of West Hollywood criteria in the Cultural Heritage Preservation Ordinance, as discussed below. As previously discussed, the *1986-87 Citywide Survey* determined, based on a reconnaissance-level survey, that the subject property "may" be considered eligible as a category 5 property and at the time was found "worthy of consideration under a future local ordinance." Since that survey was conducted, the City of West Hollywood's Cultural Heritage Advisory Board reevaluated the property located at 665 Robertson Boulevard/652 North La Peer Drive in January 1995. Based upon written and oral evidence, the board recommended denial of the designation of the structures as local cultural resources. The Cultural Heritage Advisory Board found that although the structure at 665 Robertson and 652 N La Peer once housed an industry important to the city and region, the structure itself did not contribute towards that importance. Furthermore, significant alterations to the interior and exterior of the building left it lacking integrity of location, design, feeling, or association.

Criterion A: Exemplifies Special Elements of the City. It exemplifies or reflects special elements of the city's aesthetic, architectural, cultural, economic, engineering, political, natural, or social history and possesses an integrity of design, location, materials, setting, workmanship feeling, and association.

Generally, the subject property does not appear to exemplify or reflect special elements of the city's aesthetic, architectural, cultural, economic, engineering, political, natural, or social history under Criterion A as described in detail below.

Criterion A.1: It embodies distinctive characteristics of a period, method, style, or type of construction, or is a valuable example of the use of indigenous materials or craftsmanship.

The property is a prefabricated industrial structure of mass-produced structural components and erected in great numbers by the Truscon Steel Company throughout the nation.. Mitchell Camera moved out of the factory in 1946 and all three buildings were substantially altered and adapted for subsequent nightclub and fitness club use. The former Mitchell Camera factory in its present condition is not a good example of a prefabricated industrial structure and does not embody the distinctive characteristics of a type, period, or method of construction. Architecturally, the property does not possess any distinctive or outstanding characteristics exemplary of early twentieth century industrial or Modern architecture. The method of construction, quality of materials and workmanship are common, typical and non-distinctive for this utilitarian, prefabricated type of structure. As a prefabricated building assembled from mass-produced parts, the subject property is not a valuable example of the use of indigenous materials or craftsmanship. Therefore, **this property does not meet Criterion A.1** as an example that "embodies distinctive characteristics of a period, method, style, or type of construction, or is a valuable example of the use of indigenous materials or craftsmanship," as is required under this criterion.

Criterion A.2: It contributes to the significance of a historic area by being:

a. A geographically definable area possessing a concentration of historic or scenic properties.
b. A thematically related grouping of properties, which contribute to each other and are unified aesthetically by plan or physical development.

The subject property does not meet Criteria A.2.a, as it does not "contribute to the significance of a historic area as a member of a geographically definable concentration of historic or scenic properties," as is required under this criterion. The property is an isolated example of an early 20th century prefabricated industrial structure on a city block consisting of primarily commercial properties from the mid- to late-20th century. The industrial setting of the property that comprised the majority of its surroundings through the mid-1940s is no longer extant, replaced with later, densely developed commercial properties. The subject property is a geographically isolated example of its building type and architectural style within its contemporary context and, as a result, it does not function as a member of a geographically definable concentration of industrial structures that share a historical, architectural or physical commonality or linkage. A single isolated building disconnected from its historic setting cannot be a member of a "geographically definable concentration of historic or scenic properties."

The subject property is a geographically isolated example of its building type and architectural style within its contemporary context, however Studio One from its opening in 1975, was a part of the nightclub circuit for the LGBT community in West Hollywood and beyond. It is a member of a thematically related grouping of properties, which contribute to each other and are unified by use, but are not necessarily related aesthetically or by physical development. On any given night it was customary to begin your evening at 11pm by parking along the west end of Santa Monica Boulevard in what was called "boys town" and go from club to club, to restaurant, and back to club. The subject property is still used as a nightclub despite its name change (currently called the Metropolitan or the Factory). **However the subject property does not meet Criterion A.2.b** because although it is related by use, it is not part of an aesthetically or architecturally related grouping of properties as is required under this criterion.

Criterion A.3: It reflects significant geographical patterns, including those associated with different eras of growth and settlement, particular transportation modes, or distinctive examples of community or park planning

The subject property does not meet Criterion A.3. When it was constructed in 1929 the factory reflected geographic patterns associated with rail transportation and industrial growth in the Melrose Triangle, and had a close association with the economic development and technology of the movie industry. However, the factory and adjacent office buildings were substantially altered over the years, resulting in substantial changes to the La Peer and Robertson facades, and its lack of integrity and the changes to the surrounding setting prevent it from being eligible under this criterion.

When Studio One took over 652 La Peer Drive, it was at a critical time in the history of gay rights when openly gay bars were just beginning to take flight. If it were not for the openness of West Hollywood and its late incorporation, gay nightclubs like Studio One would not have been established. Studio One reflects a pattern associated with openly gay establishments beginning in the late 1970s that were concentrated on and around Santa Monica Boulevard from the early 1920s to present. However, to accommodate night club use the entrances to the building on La Peer Drive and Robertson Lane have been substantially remodeled and the interiors completely renovated. The current entrances and interior décor are not associated with Studio One's occupancy. The property's lack of integrity related to Studio One's occupancy coupled with the fact that the community had already established itself as a friendly place for gay men and women before Studio

One opened also prevent the property from attaining significance under this criterion for its later nightclub use.

Criterion A.4:It embodies elements of architectural design, craftsmanship, detail, or materials that represent a significant structural or architectural achievement or innovation.

The subject property Does not meet Criterion A.4 because it is an undistinguished utilitarian manufacturing warehouse that is not architecturally significant in the development of early twentieth century or Modern factory design. The property is a prefabricated industrial structure of mass-produced structural components and erected in great numbers by the Truscon Steel Company in the Los Angeles area and throughout the nation. Mitchell Camera moved out of the factory in 1946 and all three buildings were substantially altered and adapted for subsequent nightclub and fitness club use. The former Mitchell Camera factory in its present condition is not a good example of a prefabricated industrial structure and does not embody the distinctive characteristics of a type, period, or method of construction. Furthermore, the subject property presently does not have enough integrity or architectural merit to convey early twentieth century or Modern factory design in the Los Angeles metropolitan area, West Hollywood, or national factories of the early twentieth century. In contrast, excellent examples of early twentieth century factory design can be found in the southwest area of Boyle Heights near the Los Angeles River. This region consists of a number of pre-war industrial structures that have retained their original character, function, and surroundings over time.[79] The former Mitchell Camera factory in its present altered condition is not a good example of a prefabricated industrial structure and does not embody the distinctive characteristics of a type, period, or method of construction nor represent significant structural or architectural achievement or innovation and therefore **cannot be eligible under criteria A.4**.

Criterion A.5: It has a unique location or singular physical characteristic or is a view or vista representing an established and familiar visual feature of a neighborhood, community, or the city.

The property does not meet Criterion A.5 as it does not "have a unique location or a singular physical characteristic or is a view or vista representing an established and familiar visual feature or a neighborhood, community, or the city" of West Hollywood at large, as is required under this criterion. The property is geographically and physically isolated from its historic setting, which has been replaced with later dense commercial development. The property does not stand out or have a unique physical location along La Peer Drive or Robertson Boulevard, but is one of numerous densely built commercial properties along the street. It is not built on a hill, is not the focal point of a view or vista, it is not singularly prominent nor does it stand out from its built environment. The lot is of a common size and orientation within the tract. The structure is not an established and familiar visual feature that stands out or is otherwise visually prominent in the community.

[79] *PCR Services Corporation, Intensive Historic Resources Survey, Adelante Eastside Redevelopment Area, Los Angeles, California, July 2008, Adelante Eastside Historic Districts, http://www.preservation.lacity.org/files/Adelante%20District_DPR%20Forms_0.pdf*

Criterion B. Example of Distinguishing Characteristics. It is one of the few remaining examples in the city, region, state or nation, possessing distinguishing characteristics of an architectural or historical type or specimen.

The property does not qualify for individual listing under Criterion B because it is not "one of the few remaining examples in the city, region, state, or nation, possessing distinguishing characteristics of an architectural or historical type or specimen." The factory at 648-652 N La Peer Drive represents one of a many prefabricated industrial structures produced by the Truscon Steel Company and other companies like them throughout the nation (See section covering National Register Criterion C, or California Criterion 3 above for additional information on the scope of Truscon's operation). The subject property is not a special design by the company but a standard model offered in their catalog featuring a variety of structural elements and combinations. The building's elements were mass-produced in Truscon's factory and thus the building does not consist of distinguishing characteristics of an architectural or historical type or specimen.

Criteria C: Identified with Persons or Events. It is identified with persons or events significant in local, state, or national history.

As discussed above under National Register Criteria A and B and the State of California Criteria 1 and 2, the factory and office buildings at 661-665 Robertson Boulevard and 648-652 N La Peer is ***not*** *eligible under* ***City of West Hollywood Criterion C*** *in relation to persons or events significant to local, state, or national history. While the building is associated with the production of Mitchell Cameras, which were significant for the production of many motion pictures throughout the twentieth century, the building was not significant in the development of camera advancements during Mitchell's occupancy. Although the factory building was constructed in 1929 for the production of Mitchell Cameras, the building itself contributed little to the development of Mitchell Camera Technology. Many of the advancements made by the Mitchell Camera Corporation were developed in cooperation with engineers and companies in laboratories outside of the 661-665 Robertson Boulevard/648-652 N La Peer Drive factory. George Mitchell, who developed technologies used by the Mitchell Camera Corporation, developed those improvements outside of the Mitchell Camera Corporation factory, including the mechanism for the NC and BNC cameras (which occurred between 1927 and 1934 when he was not working for the company). The building is a generic prefabricated industrial structure and contains no elements essential to the design, production, or maintenance of motion picture cameras. Furthermore, the building was not a significant contributor to the advancement of gay rights or the establishment of West Hollywood as a gay friendly community while serving as Studio One, a gay men's dance club. When Studio One opened in 1975, West Hollywood had already established itself as a friendly place for gay men and women. Studio One contributed to the gay social setting in West Hollywood but was not the first LGBT social institution in the area, nor was it the longest in operation. West Hollywood contained many LGBT friendly establishments, including Revolver, Blue-Parrot (now Eleven), Mother Lode, Gold Coast, Mikey's, and Rage, as discussed earlier in the historic context. Studio One did not help establish a gay-friendly social culture in West Hollywood nor contribute significantly to the advancement of the gay rights movement. Criteria D: Notable Work. It is representative of the work of a notable architect, builder, or designer.*

The subject property is not the work of a notable architect, builder, or designer and therefore is **not eligible under Criterion D**. The structure is one of many mass-produced, prefabricated industrial buildings developed by the Truscon Steel Company.

D. CONCLUSION

The existing buildings on the Project Site appear ineligible for listing under any federal, state or local eligibility criteria. As a result of these investigations, the subject property is assigned a California Historical Resource Status Code of 6Z, found ineligible for National Register, California Register or local designation through survey evaluation. No further consideration of historical resources is required under CEQA.

IV. BIBLIOGRAPHY

A. PUBLICATIONS

Benevelo, Leonardo. *History of Modern Architecture*. Cambridge: The M.I.T. Press, 1977.

Bordwell, David, Janet Staiger, and Kristin Thompson. *The Classical Hollywood Cinema: Film Style and Mode of Production to 1960.* New York: Columbia University Press, 1985.

Brennan, Carol Ed., et al. "The Gay Rights Movement." *American Social Reform Movements Reference Library*. Vol. 1: Almanac. Detroit: UXL, 2007.

Bruce, Alfred and Harold Sandbank. *A History of Prefabrication*. Raritan, N.J.: John B. Pierce foundation, 1945.

California Code of Regulations, California Register of Historical Resources (Title 14, Chapter11.5), Section 4852(c).

California Public Resources Code § 5024.1.

City of West Hollywood. "City of West Hollywood Historic Resource Survey, 1986-1987." Prepared by Johnson Heuman Research Associates, Draft 1987.

Code of Federal Regulations (CFR), 36 § 60.2.

Crafton, Donald. *The Talkies: American Cinema's Transition to Sound 1926-1931*. Berkley: University of California Press, 1999.

Faderman, Lillian and Stuart Timmons. *Gay L.A.: A History of Sexual Outlaws, Power Politics, and Lipstick Lesbians*. New York, NY: Basic Books, 2006.

Gebhard, Robert and Robert Winter. *An Architectural Guidebook to Los Angeles.* Utah: Bibbs Smith, 2003.

Kaiser, Charles. The Gay Metropolis: The Landmark History of Gay Life in America. New York, NY: Grove Press, 1997.

National Park Service. *National Register Bulletin 15: How to Apply the National Register Criteria for Evaluation.* Washington DC: U.S. Dept. of the Interior, National Park Service, Interagency Resources Division, 1990, rev. 1991.

National Park Service. *National Register Bulletin 16: Guidelines for Completing National Register Forms.* Washington, D.C.: U.S. Dept. of the Interior, National Park Service, 1986.

Office of Historic Preservation. *Instructions for Recording Historical Resources*. March 1995.

Office of State Historic Preservation. *California Historic Resources Inventory, Survey Workbook (excerpts).* Sacramento, CA: State of California, 1986.

Parker, Patricia L. *National Register Bulletin 24, Guidelines for Local Surveys: A Basis for Preservation Planning.* Washington, DC: U.S. Government Printing Office, 1985.

Pike, Gale. Laguna Beach and Its Restaurants: The Way It Used to Be. Illinois: Author House, 2011.

Roberts, Laurence J. "The Mitchell Camera: The Machine and Its Makers," *Society of Motion Picture and Television Engineers Journal* (Vol. 10, No. 2). October 1, 1982.

Rutledge, Leigh W. The Gay Decades: From Stonewall to the Present, The People and Events That Shaped Gay Lives. New York: Plume, 1992.Thompson, Mark, ed.

Sennott, Stephen. *Encyclopedia of 20th Century Architecture*. New York: Taylor & Francis, 2004.

Sismondo, Christine. America Walks into a Bar. New York: Oxford University Press, 2011.

SurveyLA LGBT Historic Context Statement, Prepared by GPA Consulting, Carson Anderson, and Wes Joe for the City of Los Angeles, Department of City Planning, Office of Historic Resources, September 2014.

Thompson, M., R. Shilts. Long Road to Freedom: The Advocate History of the Gay and Lesbian Movement. New York: St. Martin's Press, 1994.

Walker, Alexander. *The Shattered Silents; How the Talkies Came to Stay*. New York: William Morrow, 1979.

B. NEWSPAPERS AND PERIODICALS

*"*Company *Will Make Camera in New Plant."* Los Angeles Times. *10 March 1929: E9*. *Print.*

Dwan*, Louis. "Roundabout."* Los Angeles Times*. 24 October 1973: D5. Print.*

Evans, L. Gay Chronicles. The Before Stonewall Bar Guide. http://gayinsacramento.com/Chron1-Calif-page.htm. (accessed 9/11/14).

"Four Concerns Hit By $300,000 Blaze." *Los Angeles Times.* 9 August 1951: 30. Print.

Flanagan, Michael. "The Ex Gays. Will the Hetero-zation of Queer Bars Ever End?" The Bay Area Reporter. http://ebar.com/bartab/article.php?sec=bartab&article=40. (accessed 9/15/14).

Hallowell*, John. "Every Shift Swings at The Factory."* Los Angeles Times*. 15 September 1968: A22. Print.*

Heully, Gustave. "Ever Wonder: Was the Factory a Factory?" Wehoville*. 23 September* 2013. Web.

"Kinner Motor Plant Sold." *Los Angeles Times*. 6 April 1946: A8. Print.

Kane, R. "An Incomplete History of Gays and Lesbians OC." OC Weekly News. http://www.ocweekly.com/1999-08-19/news/an-incomplete-history-of-gay-lesbian-oc/3/. (accessed 9/10/14).

Salmon, Ryan and Meghan Elliot. "The Kahn System of Reinforced Concrete: Why it Almost Mattered," *Structure Magazine*. April 2013.

Swaim, W., T. Douglas, R. Kane. "Americas Gayest County! A secret queer history of Orange County." OC Weekly News. http://www.ocweekly.com/2004-05-13/news/america-s-gayest-county/. (accessed 9/12/14).

"Truscon Permanent Buildings." Youngstown, OH: Truscon Steel Company, 1925. Print.

Webb, Andrew C. "Gays Quest for Civil Rights is Hobbled by the Brethren Hiding in the Closet." *Los Angeles Times.*

A guide to gay and lesbian historic sites. http://queerestplaces.wordpress.com/2009/01/24/san-franciscos-black-cat/. (accessed 9/15/14).

"Archive for the gay 'bars' Category." The Queerest Places: A Guide to Gay and Lesbian Historic Sites. http://queerestplaces.wordpress.com/category/bars/. (accessed 9/10/14).

Gay and Lesbian Bars. Encyclopedia of gay, lesbian, bisexual, transgender, and queer culture - Social Sciences. http://www.glbtq.com/social-sciences/gay_lesbian_bars,2.html. (accessed 9/10/14)

V. APPENDIX

A. Los Angeles County Assessor's Index Map, Assessor Map, and Property Record

B. Historic Maps

C. Record Search Results

D. Current Photographs

E. Professional Qualifications

A. Los Angeles County Assessor's Index Map, Assessor Map, and Property Record

4336

1996

SCALE 1" = 400'

750905
811230
841128
850225-207
920625
920826
951227

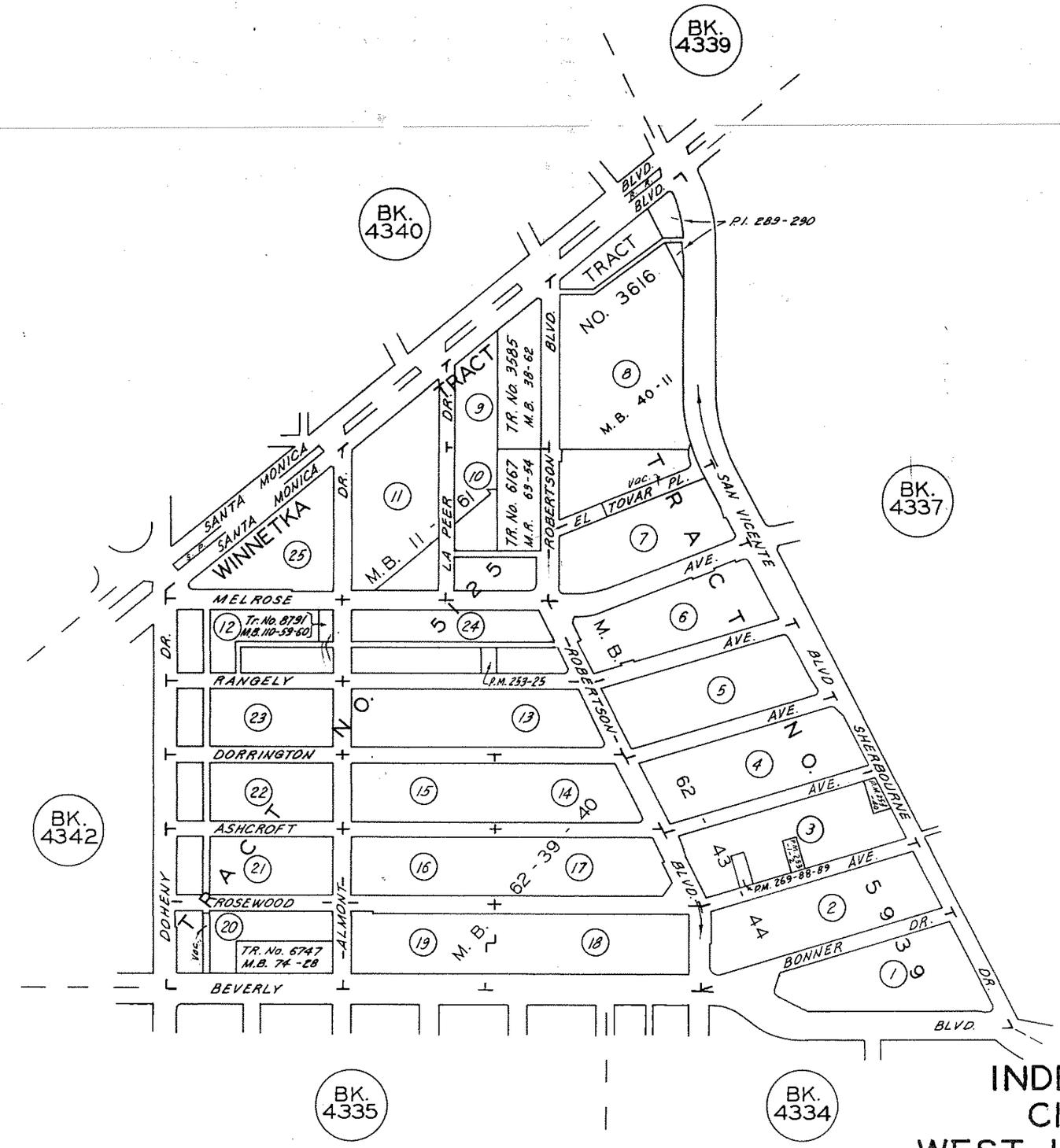

INDEX 4336
CITY OF
WEST HOLLYWOOD

ASSESSOR'S MAP
COUNTY OF LOS ANGELES, CALIF.

4336 | 9

SCALE 1" = 60'

10-10-61
3-23-62

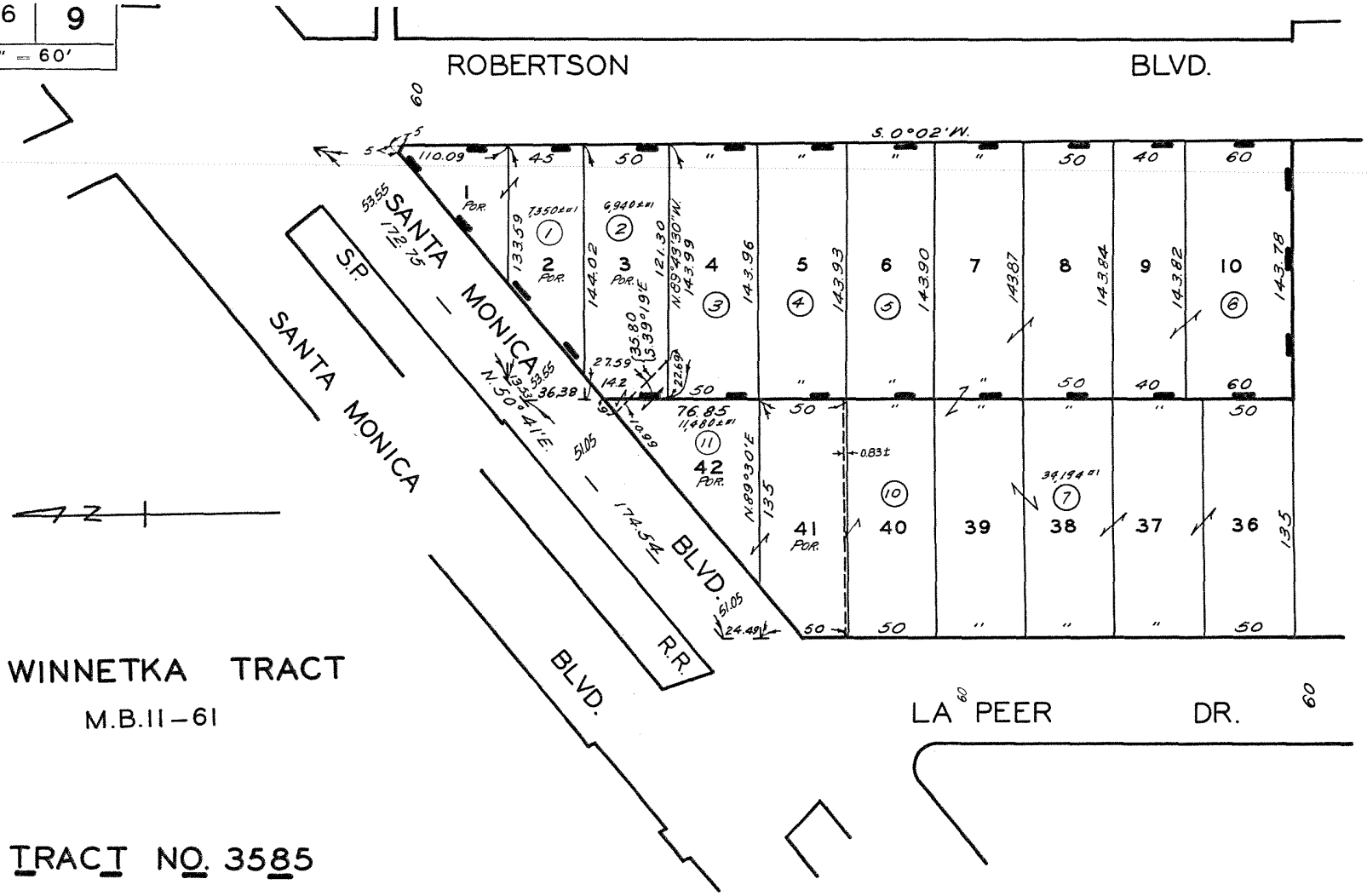

WINNETKA TRACT

M.B.11-61

TRACT NO. 3585

M.B.38-62

CODE
1317

FOR PREV. ASSM'T. SEE: 1689-9

ASSESSOR'S MAP
COUNTY OF LOS ANGELES, CALIF.

Records for this property are kept at the West District Office
("How frequently is the information updated on this site?" and other FAQs)

Property Information

Assessor's ID No.	4336-009-007
Site Address	648 N LA PEER DR W HOLLYWOOD CA 90069
Property Type	Commercial / Industrial
Region / Cluster	25 / 25892
Tax Rate Area (TRA)	01319

Click Here to View Assessor's Map

(Click Here to View Index Map)

Recent Sale Information

Latest Sale Date	
Indicated Sale Price	

Search for Recent Sales

2013 Roll Values

Recording Date	07/07/1998
Land	$848,125
Improvements	$350,162
Personal Property	$0
Fixtures	$0
Homeowners' Exemption	$0
Real Estate Exemption	$0
Personal Property Exemption	$0
Fixture Exemption	$0

Click Here for 2013 Annual Taxes

(I have a question regarding my property tax payment)

Estimate Supplemental Taxes

Property Boundary Description

LOTS 7 AND 8 TRACT # 3585 AS PER BK 38 PG 62 OF MAPS AND LOTS 36,37,38 AND 39 WINNETKA TR AS PER BK 11 PG 61 OF MAPS

Building Description(s)

	Improvement 1
Square Footage	29,443
Year Built / Effective Year Built	1929 / 1936
Bedrooms / Bathrooms	0 / 0
Units	0

Click Here for Another Search

B. Historic Maps

WINNETKA TRACT

Being a Subdivision of J. A. Swall Tract as per M. B. 9-26 and M. R. 107-182-183 and a portion of Lots 2&3 of Swall Tract M.B. 1-19, also a portion of Lot 33 of the Subdivision of the Rancho Rodeo de Las Aquas M.R. 1-571 & 2

Surveyed Oct. 1906 Scale 100ft.=1inch by Jos. A. Hurley

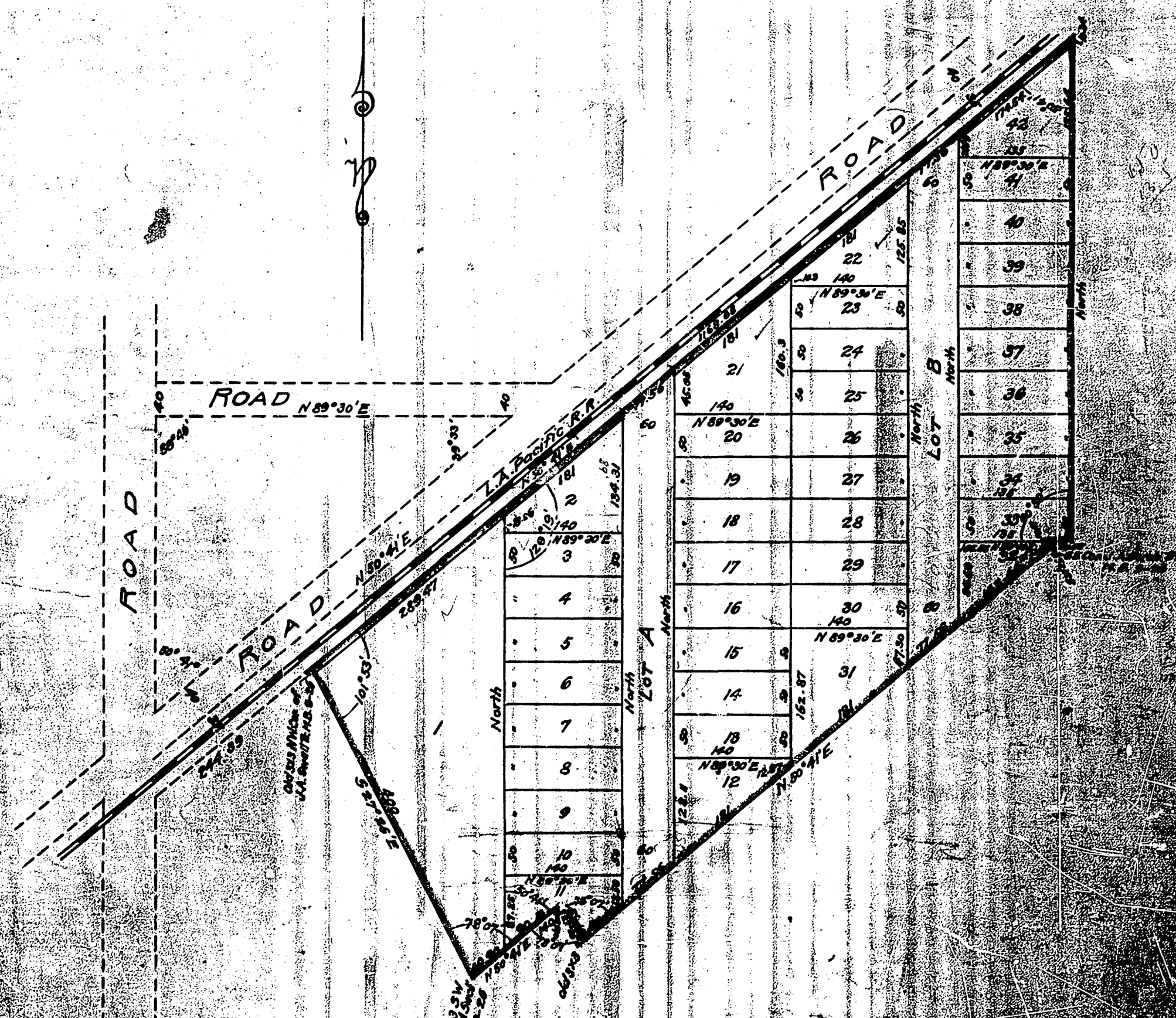

Owners:

Lucian T. Swell " " 21 " " " " D. 63-116 O.R.
" " 22-23 " " " " D. 63-117 O.R.
Mrs. Etta Collins " " 41-42 " " " " D. 63-118 O.R.
" " 3 " " " " D. 63-119 O.R.
Josef A. Small " " 1 " " " " D. 63-124 O.R.
" " 7 " " " " D. 63-12 O.R.
" " 22 " " " " D. 63-14 O.R.

Recorded Nov. 14 1908
(Scale reduced to Nov. 7)

Book 35-62 Maps

Feb. 13. 1920
20
35
62
Maps

20

Deputy
$5.00

TRACT Nº 3585

Being a subdivision of a portion of lot 33 of the
Rancho Rodeo de las Aguas
as recorded in Book 1 pages 571 and 572 Miscellaneous Records
of Los Angeles County.
Surveyed January 1920 by Wm M. Jonson, Surveyor
Scale 1" = 80'

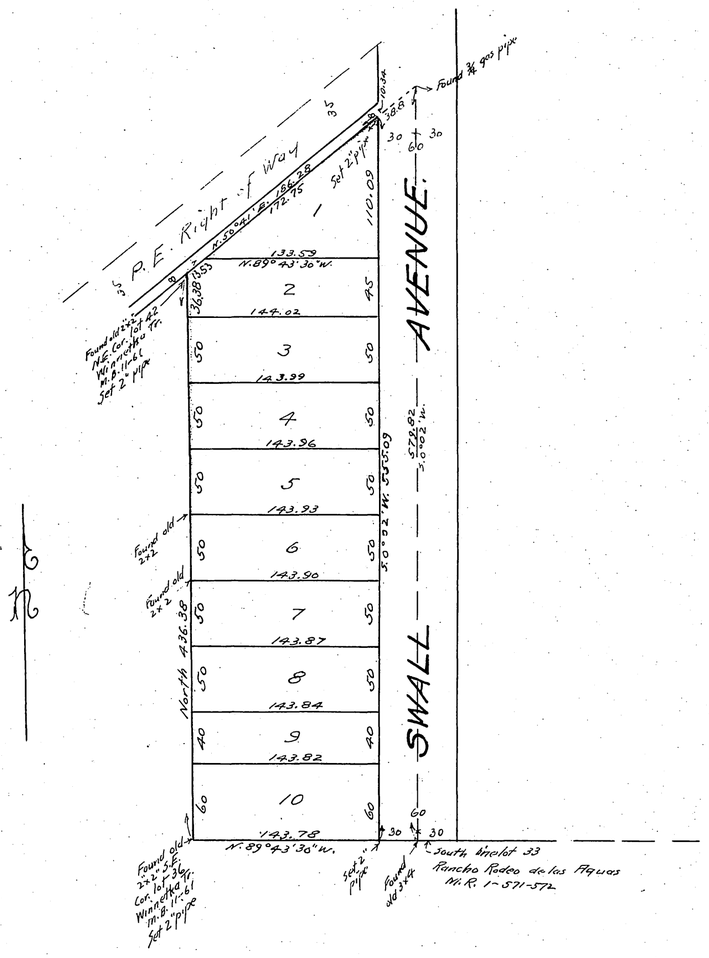

1 am
1 am

California
Los Angeles
January
Twenty 1920.

Los Angeles California

13
he

Los Angeles
California

William Max Jonson
Licensed Surveyor of the State of California
one January
1920
William Max Jonson

Hadley

Tr. 3585
Book 35-62

Deputy

FEB. 13, 1920

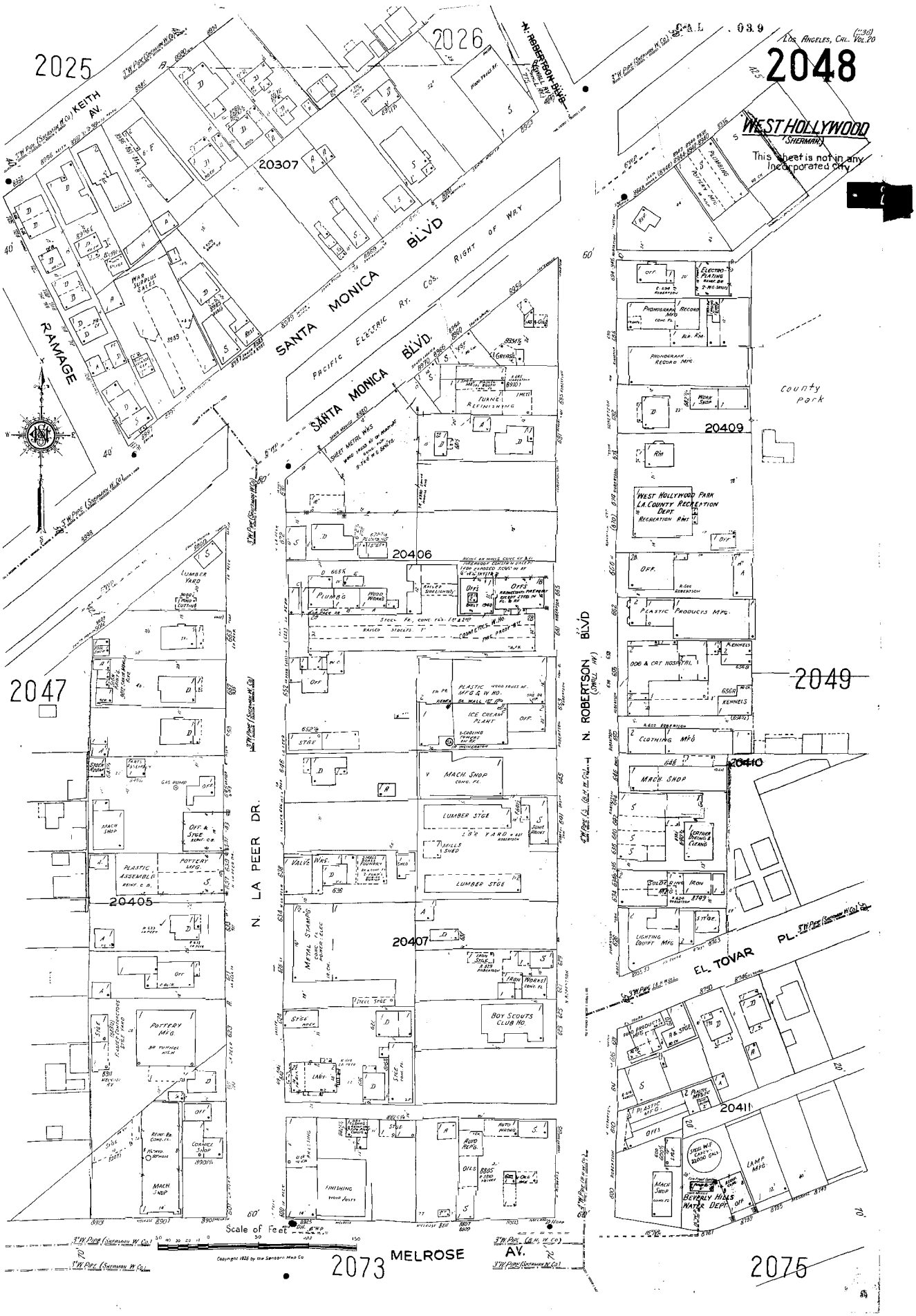
2025
2026
2048
2047
2049
2073
2075
20307
20405
20406
20407
20409
20410
20411
KEITH AV.
N. ROBERTSON BLVD
SANTA MONICA BLVD
PACIFIC ELECTRIC RY. CO'S. RIGHT OF WAY
RAMAGE
N. LA PEER DR.
N. ROBERTSON BLVD
EL TOVAR PL.
MELROSE AV.
WEST HOLLYWOOD
(SHERMAN)
This sheet is not in any Incorporated City
County Park
WEST HOLLYWOOD PARK
L.A. COUNTY RECREATION DEPT
RECREATION PARK
PLUMBG
WOOD WORKS
OFFS
ICE CREAM PLANT
MACH. SHOP
LUMBER STGE
LUMBER YARD
VALVE WKS.
METAL STAMPING
BOY SCOUTS CLUB HO.
POTTERY MFG.
PLASTIC ASSEMBLG
CLOTHING MFG
LIGHTING EQUIPT MFG
PLASTIC PRODUCTS MFG.
DOG & CAT HOSPITAL
KENNELS
PHONOGRAPH RECORD MFG.
ELECTRO PLATING
LAMP MFG.
BEVERLY HILLS WATER DEPT.
Scale of Feet
Copyright 1926 by the Sanborn Map Co.

C. Record Search Results

Table 3

Previously Recorded Resources within 0.50-Mile of Project Site

Name	Street Number	Street	Description	Construction Date	Eligibility	Distance from Project; View of Project (Yes/No)
Mitchell Camera Manufacturing Co.	652	N La Peer Ave	Factory/Nightclub	1931	HRI P-176819 CHR Status Code 3S	Project site Yes
Boy Scouts of America Clubhouse	623	N Robertson Blvd		1928	HRI P-176824 CHR Status Code 3S	Approximately .1 mile to south Yes: Distant view of Project
Cristoefelles Lace Factory	824	N Robertson Blvd		1924	HRI P-176825 CHR Status Code 5S2	Approximately .15 mile to north No: No view of Project
	8991	Norma Pl		1923	HRI (no number) CHR Status Code 6Y (8/20/93)	Approximately .2 mile to north No: No view of Project
	537	Norwich Dr		1916	HRI (no number) CHR Status Code 6Y (10/6/97)	Approximately .2 mile to southeast No: No view of Project
	8724	Rangely Ave		1926	HRI (no number) CHR Status Code 6Y (1/5/95)	Approximately .2 mile to southeast No: No view of Project

Table 3 (Continued)

Previously Recorded Resources within 0.50-Mile of Project Site

Name	Street Number	Street	Description	Construction Date	Eligibility	Distance from Project; View of Project (Yes/No)
	837	N San Vicente Blvd		1905	HRI P-176793 CHR Status Code 7N	Approximately .2 mile to north No: No view of Project
	838	N San Vicente Blvd		1905	HRI P-176794 CHR Status Code 7N	Approximately .2 mile to north No: No view of Project
	840	N San Vicente Blvd		1905	HRI P-176795 CHR Status Code 7N	Approximately .2 mile to north No: No view of Project
	843	N San Vicente Blvd		1907	HRI P-176796 CHR Status Code 7N	Approximately .2 mile to north No: No view of Project
	847	N San Vicente Blvd		1915	HRI P-176797 CHR Status Code 7N	Approximately .2 mile to north No: No view of Project
	849	N San Vicente Blvd		1905	HRI P-176798 CHR Status Code 7N	Approximately .2 mile to north No: No view of Project

Table 3 (Continued)

Previously Recorded Resources within 0.50-Mile of Project Site

Name	Street Number	Street	Description	Construction Date	Eligibility	Distance from Project; View of Project (Yes/No)
	850	N San Vicente Blvd		1898	HRI P-176799 CHR Status Code 7N	Approximately .2 mile to north No: No view of Project
	853	N San Vicente Blvd		1905	HRI P-176800 CHR Status Code 7N	Approximately .2 mile to north No: No view of Project
	863	N San Vicente Blvd		1902	HRI P-176801 CHR Status Code 7N	Approximately .2 mile to north No: No view of Project
	864	N San Vicente Blvd		1905	HRI P-176802 CHR Status Code 7N	Approximately .2 mile to north No: No view of Project
	873	N San Vicente Blvd		1899	HRI P-176803 CHR Status Code 3S	Approximately .2 mile to north No: No view of Project
	883	N San Vicente Blvd		1901	HRI P-176804 CHR Status Code 7N	Approximately .2 mile to north No: No view of Project

Table 3 (Continued)

Previously Recorded Resources within 0.50-Mile of Project Site

Name	Street Number	Street	Description	Construction Date	Eligibility	Distance from Project; View of Project (Yes/No)
	889	N San Vicente Blvd		1900	HRI P-176805 CHR Status Code 7N	Approximately .2 mile to north No: No view of Project
First National Bank of Sherman	8811	Santa Monica Blvd		1922	HRI P-176887 CHR Status Code 7N	Approximately .2 mile to north No: No view of Project
Gable and Wyant Commercial Building (West Hollywood Professional Building)	8851	Santa Monica Boulevard	Colonial Revival Commercial Architecture	1926	Locally designated Historic and Cultural Resource (West Hollywood Historic and Cultural Resources Map) HRI P19-176829 CHR Status Code 5S2	Approximately 0.2 mile to northeast. No: No view of Project.
	935	N San Vicente Blvd		1905	HRI P-176806 CHR Status Code 7N	Approximately .3 mile to north No: No view of Project
	8952	Norma Place	Two-Story Residence. Former Dressing Rooms for Nearby Studio	1921	Locally designated Historic and Cultural Resource (West Hollywood Historic and Cultural Resources Map) HRI P-176821 CHR Status Code 5S2	Approximately 0.3 mile to north. No: No view of Project.

Table 3 (Continued)

Previously Recorded Resources within 0.50-Mile of Project Site

Name	Street Number	Street	Description	Construction Date	Eligibility	Distance from Project; View of Project (Yes/No)
	837	San Vicente Boulevard	Early Vernacular Structure Related to Original Town of Sherman, Ca	1902	Locally designated Historic and Cultural Resource (West Hollywood Historic and Cultural Resources Map)	Approximately 0.3 mile to north. No: No view of Project.
	845	San Vicente Boulevard	Early Vernacular Structure Related to Original Town of Sherman, Ca	1900	Locally designated Historic and Cultural Resource (West Hollywood Historic and Cultural Resources Map)	Approximately 0.3 mile to north. No: No view of Project.
	847	San Vicente Boulevard	Early Vernacular Structure Related to Original Town of Sherman, Ca	1900	Locally designated Historic and Cultural Resource (West Hollywood Historic and Cultural Resources Map)	Approximately 0.3 mile to north. No: No view of Project.
	850	San Vicente Boulevard	Early Vernacular Structure Related to Original Town of Sherman, Ca	1899	Locally designated Historic and Cultural Resource (West Hollywood Historic and Cultural Resources Map)	Approximately 0.3 mile to north. No: No view of Project.
First National Bank of Sherman	8811	Santa Monica Boulevard	Italianate Revival Style Commercial Building	1922	Locally designated Historic and Cultural Resource (West Hollywood Historic and Cultural Resources Map)	Approximately 0.3 mile to northeast. No: No view of Project.
	8867	W Cynthia Street	Craftsman Style Bungalow	1912	Locally designated Historic and Cultural Resource (West Hollywood Historic and Cultural Resources Map)	Approximately 0.3 mile to north. No: No view of Project.

Table 3 (Continued)

Previously Recorded Resources within 0.50-Mile of Project Site

Name	Street Number	Street	Description	Construction Date	Eligibility	Distance from Project; View of Project (Yes/No)
Old Sherman	8914	W Cynthia Street	Grouping of Residences From the Original Town of Sherman	1905	Locally designated Historic and Cultural Resource (West Hollywood Historic and Cultural Resources Map) HRI P19-176783 HR Status Code 7N	Approximately 0.3 mile to north No: No view of Project.
	8924	W Cynthia Street		No date	HRI P19-176784 HR Status Code 3S	Approximately 0.3 mile to north No: No view of Project.
Dutch Reformed Church, First Baptist Church	9025	W Cynthia Street		1924	HRI P19-176808 CHR Status Code 3S	Approximately 0.3 mile to north No: No view of Project.
	825	N Larrabbee St		1905	HRI P19-176787 CHR Status Code 7N	Approximately 0.3 mile to northeast No: No view of Project
	829	N Larrabee St		1908	HRI P19-176788 CHR Status Code 7N	Approximately 0.3 mile to northeast No: No view of Project

Table 3 (Continued)

Previously Recorded Resources within 0.50-Mile of Project Site

Name	Street Number	Street	Description	Construction Date	Eligibility	Distance from Project; View of Project (Yes/No)
	858	N Larrabee St		1905	HRI P-176789 CHR Status Code 5S2	Approximately 0.3 mile to northeast No: No view of Project
Pacific Design Center, MOCA Art Gallery	8687	Melrose Avenue	Modern Institutional Architecture	1975 & 1987	Locally designated Historic and Cultural Resource (West Hollywood Historic and Cultural Resources Map) HRI P19-176757 CHR Status Code 7N (No Date)	Approximately 0.4 mile to east. No: No view of Project.
	8701	Santa Monica Boulevard		1928	HRI P19-176759 CHR Status Code 3S	Approximately 0.4 mile to northeast. No: No view of Project.
Craftsman Grouping		N Hancock Ave	Grouping of Craftsman Residences	1911	HRI P19-176871 CHR Status Code 6Y (6/22/95)	Approximately 0.4 mile to northeast No: No view of Project
	954	N Hancock Ave	County Fire Station #7	1926	HRI P19-176818 CHR Status Code 3S (No date)	Approximately 0.4 mile to northeast No: No view of Project

Table 3 (Continued)

Previously Recorded Resources within 0.50-Mile of Project Site

Name	Street Number	Street	Description	Construction Date	Eligibility	Distance from Project; View of Project (Yes/No)
	959	N Hancock Ave		1912	HRI P19-176857 CHR Status Code 5D2 (No date)	Approximately 0.4 mile to northeast No: No view of Project
	985	N Hancock Ave		1910	HRI P19-176785 CHR Status Code 5S2 (No date)	Approximately 0.4 mile to northeast No: No view of Project
	987	N Hancock Ave		1925	HRI P19-176786 CHR Status Code 6L (No date)	Approximately 0.4 mile to northeast No: No view of Project
	991	N Hancock Ave		1925	HRI P19-176858 CHR Status Code 5D2	Approximately 0.4 mile to northeast No: No view of Project
	995	N Hancock Ave		1912	HRI P19-176859 CHR Status Code 5D2	Approximately 0.4 mile to northeast No: No view of Project
	927	N Palm Ave		1902	HRI P-176790 CHR Status Code 3S	Approximately 0.4 mile to northeast No: No view of Project

Table 3 (Continued)

Previously Recorded Resources within 0.50-Mile of Project Site

Name	Street Number	Street	Description	Construction Date	Eligibility	Distance from Project; View of Project (Yes/No)
	931	N Palm Ave		1902	HRI P-176791 CHR Status Code 3S	Approximately 0.4 mile to northeast No: No view of Project
	950	N Palm Ave		1909	HRI P-176792 CHR Status Code 7N	Approximately 0.4 mile to northeast No: No view of Project
	976	N Palm Ave		1927	HRI P-176865 CHR Status Code 5D2	Approximately 0.4 mile to northeast No: No view of Project
	978	N Palm Ave		1915	HRI P-176867 CHR Status Code 5D2	Approximately 0.4 mile to northeast No: No view of Project
	980	N Palm Ave		1915	HRI P-176868 CHR Status Code 5D2	Approximately 0.4 mile to northeast No: No view of Project
	982	N Palm Ave		1915	HRI P-176869 CHR Status Code 5D2	Approximately 0.4 mile to northeast No: No view of Project

Table 3 (Continued)

Previously Recorded Resources within 0.50-Mile of Project Site

Name	Street Number	Street	Description	Construction Date	Eligibility	Distance from Project; View of Project (Yes/No)
	984	N Palm Ave		1915	HRI P-176870 CHR Status Code 5D2	Approximately 0.4 mile to northeast No: No view of Project
	986	N Palm Ave		1915	HRI P-176866 CHR Status Code 5D2	Approximately 0.4 mile to northeast No: No view of Project
County Library	903	N Westhourne Ave		1922	HRI P-176888 CHR Status Code 3S	Approximately 0.4 mile to northeast No: No view of Project
Lloyd Wright Home and Studio	858	N. Doheny Drive	Modern Single Family Residence	1927	Locally designated Historic and Cultural Resource (West Hollywood Historic and Cultural Resources Map) HRI P19-176742 CHR Status Code 1S (4/6/1987)	Approximately 0.5 mile to north. No: No view of Project.
English Village	1000	N Larrabee St		1924	HRI P-176886 CHR Status Code 7N	Approximately 0.5 mile to northeast No: No view of Project

California Historical Resource Status Codes

1 Properties listed in the National Register (NR) or the California Register (CR)

1D	Contributor to a district or multiple resource property listed in NR by the Keeper. Listed in the CR.
1S	Individual property listed in NR by the Keeper. Listed in the CR.
1CD	Listed in the CR as a contributor to a district or multiple resource property by the SHRC
1CS	Listed in the CR as individual property by the SHRC.
1CL	Automatically listed in the California Register – Includes State Historical Landmarks 770 and above and Points of Historical Interest nominated after December 1997 and recommended for listing by the SHRC.

2 Properties determined eligible for listing in the National Register (NR) or the California Register (CR)

2B	Determined eligible for NR as an individual property and as a contributor to an eligible district in a federal regulatory process. Listed in the CR.
2D	Contributor to a district determined eligible for NR by the Keeper. Listed in the CR.
2D2	Contributor to a district determined eligible for NR by consensus through Section 106 process. Listed in the CR.
2D3	Contributor to a district determined eligible for NR by Part I Tax Certification. Listed in the CR.
2D4	Contributor to a district determined eligible for NR pursuant to Section 106 without review by SHPO. Listed in the CR.
2S	Individual property determined eligible for NR by the Keeper. Listed in the CR.
2S2	Individual property determined eligible for NR by a consensus through Section 106 process. Listed in the CR.
2S3	Individual property determined eligible for NR by Part I Tax Certification. Listed in the CR.
2S4	Individual property determined eligible for NR pursuant to Section 106 without review by SHPO. Listed in the CR.
2CB	Determined eligible for CR as an individual property and as a contributor to an eligible district by the SHRC.
2CD	Contributor to a district determined eligible for listing in the CR by the SHRC.
2CS	Individual property determined eligible for listing in the CR by the SHRC.

3 Appears eligible for National Register (NR) or California Register (CR) through Survey Evaluation

3B	Appears eligible for NR both individually and as a contributor to a NR eligible district through survey evaluation.
3D	Appears eligible for NR as a contributor to a NR eligible district through survey evaluation.
3S	Appears eligible for NR as an individual property through survey evaluation.
3CB	Appears eligible for CR both individually and as a contributor to a CR eligible district through a survey evaluation.
3CD	Appears eligible for CR as a contributor to a CR eligible district through a survey evaluation.
3CS	Appears eligible for CR as an individual property through survey evaluation.

4 Appears eligible for National Register (NR) or California Register (CR) through other evaluation

4CM	Master List - State Owned Properties – PRC §5024.

5 Properties Recognized as Historically Significant by Local Government

5D1	Contributor to a district that is listed or designated locally.
5D2	Contributor to a district that is eligible for local listing or designation.
5D3	Appears to be a contributor to a district that appears eligible for local listing or designation through survey evaluation.
5S1	Individual property that is listed or designated locally.
5S2	Individual property that is eligible for local listing or designation.
5S3	Appears to be individually eligible for local listing or designation through survey evaluation.
5B	Locally significant both individually (listed, eligible, or appears eligible) and as a contributor to a district that is locally listed, designated, determined eligible or appears eligible through survey evaluation.

6 Not Eligible for Listing or Designation as specified

6C	Determined ineligible for or removed from California Register by SHRC.
6J	Landmarks or Points of Interest found ineligible for designation by SHRC.
6L	Determined ineligible for local listing or designation through local government review process; may warrant special consideration in local planning.
6T	Determined ineligible for NR through Part I Tax Certification process.
6U	Determined ineligible for NR pursuant to Section 106 without review by SHPO.
6W	Removed from NR by the Keeper.
6X	Determined ineligible for the NR by SHRC or Keeper.
6Y	Determined ineligible for NR by consensus through Section 106 process – Not evaluated for CR or Local Listing.
6Z	Found ineligible for NR, CR or Local designation through survey evaluation.

7 Not Evaluated for National Register (NR) or California Register (CR) or Needs Revaluation

7J	Received by OHP for evaluation or action but not yet evaluated.
7K	Resubmitted to OHP for action but not reevaluated.
7L	State Historical Landmarks 1-769 and Points of Historical Interest designated prior to January 1998 – Needs to be reevaluated using current standards.
7M	Submitted to OHP but not evaluated - referred to NPS.
7N	Needs to be reevaluated (Formerly NR Status Code 4)
7N1	Needs to be reevaluated (Formerly NR SC4) – may become eligible for NR w/restoration or when meets other specific conditions.
7R	Identified in Reconnaissance Level Survey: Not evaluated.
7W	Submitted to OHP for action – withdrawn.

ROPERTY-NUMBER	PRIMARY-#	STREET.ADDRESS.....	NAMES.....	CITY.NAME.....	OWN	YR-C	OHP-PROG..	PRG-REFERENCE-NUMBER	STAT-DAT	NRS	CRIT
168249		2224 HAVENBROOK ST		WEST COVINA	P	1950	PROJ.REVW.	FHWA020703A	09/06/02	6Y	
168248		2230 HAVENBROOK ST		WEST COVINA	P	1950	PROJ.REVW.	FHWA020703A	09/06/02	6Y	
168247		2236 HAVENBROOK ST		WEST COVINA	P	1950	PROJ.REVW.	FHWA020703A	09/06/02	6Y	
168246		2242 HAVENBROOK ST		WEST COVINA	P	1950	PROJ.REVW.	FHWA020703A	09/06/02	6Y	
168245		2248 HAVENBROOK ST		WEST COVINA	P	1950	PROJ.REVW.	FHWA020703A	09/06/02	6Y	
168244		2302 HAVENBROOK ST		WEST COVINA	P	1950	PROJ.REVW.	FHWA020703A	09/06/02	6Y	
168243		2306 HAVENBROOK ST		WEST COVINA	P	1950	PROJ.REVW.	FHWA020703A	09/06/02	6Y	
168242		2310 HAVENBROOK ST		WEST COVINA	P	1950	PROJ.REVW.	FHWA020703A	09/06/02	6Y	
168241		2314 HAVENBROOK ST		WEST COVINA	P	1950	PROJ.REVW.	FHWA020703A	09/06/02	6Y	
168240		2318 HAVENBROOK ST		WEST COVINA	P	1950	PROJ.REVW.	FHWA020703A	09/06/02	6Y	
168239		2320 HAVENBROOK ST		WEST COVINA	P	1950	PROJ.REVW.	FHWA020703A	09/06/02	6Y	
168238		2322 HAVENBROOK ST		WEST COVINA	P	1950	PROJ.REVW.	FHWA020703A	09/06/02	6Y	
168188		117 N ELLEN DR		WEST COVINA	P	1953	PROJ.REVW.	FHWA020703A	09/06/02	6Y	
168190		118 N MAPLEWOOD AVE		WEST COVINA	P	1953	PROJ.REVW.	FHWA020703A	09/06/02	6Y	
168189		118 N MORADA AVE		WEST COVINA	P	1955	PROJ.REVW.	FHWA020703A	09/06/02	6Y	
168253		112 N TOLAND AVE		WEST COVINA	P	1951	PROJ.REVW.	FHWA020703A	09/06/02	6Y	
168200		106 S ASTELL AVE		WEST COVINA	P	1953	PROJ.REVW.	FHWA020703A	09/06/02	6Y	
150936		718 S AZUSA AVE	FIRST UNITED METHODIST CHURCH OF W	WEST COVINA	P	1956	HIST.RES.	DOE-19-04-0359-0000	04/16/04	6Y	
							PROJ.REVW.	FCC040408A	04/16/04	6Y	
168210		106 S BAYMAR ST		WEST COVINA	P	1952	PROJ.REVW.	FHWA020703A	09/06/02	6Y	
168375		115 S CALVADOS AVE		WEST COVINA	P	1954	PROJ.REVW.	FHWA020703A	09/06/02	6Y	
168204		102 S CHERRYWOOD ST		WEST COVINA	P	1952	PROJ.REVW.	FHWA020703A	09/06/02	6Y	
168205		101 S FERNWOOD ST		WEST COVINA	P	1952	PROJ.REVW.	FHWA020703A	09/06/02	6Y	
168206		102 S FERNWOOD ST		WEST COVINA	P	1952	PROJ.REVW.	FHWA020703A	09/06/02	6Y	
168213		101 S FIRCROFT ST		WEST COVINA	P	1954	PROJ.REVW.	FHWA020703A	09/06/02	6Y	
168198		105 S GARDENGLEN ST		WEST COVINA	P	1953	PROJ.REVW.	FHWA020703A	09/06/02	6Y	
168199		106 S GARDENGLEN ST		WEST COVINA	P	1953	PROJ.REVW.	FHWA020703A	09/06/02	6Y	
168197		104 S GLENDORA AVE		WEST COVINA	P	1953	PROJ.REVW.	FHWA020703A	09/06/02	6Y	
168196		126 S GLENDORA AVE		WEST COVINA	P	1954	PROJ.REVW.	FHWA020703A	09/06/02	6Y	
065867		240 S GLENDORA AVE	MORRIS PL BR	WEST COVINA	U		HIST.RES.	DOE-19-89-0033-0000	05/31/89	6Y	
							PROJ.REVW.	FDIC890511g	05/31/89	6Y	
168207		107 S HOMEREST AVE		WEST COVINA	P	1952	PROJ.REVW.	FHWA020703A	09/06/02	6Y	
168208		118 S HOMEREST AVE		WEST COVINA	P	1952	PROJ.REVW.	FHWA020703A	09/06/02	6Y	
168203		103 S ROBIN RD		WEST COVINA	P	1952	PROJ.REVW.	FHWA020703A	09/06/02	6Y	
168202		104 S TURNER AVE		WEST COVINA	P	1952	PROJ.REVW.	FHWA020703A	09/06/02	6Y	
168187		1415 W GARVEY AVE		WEST COVINA	P	1955	PROJ.REVW.	FHWA020703A	09/06/02	6Y	
168185		1609 W GARVEY AVE	CATHOLIC RESOURCE CENTER	WEST COVINA	P	1953	PROJ.REVW.	FHWA020703A	09/06/02	6Y	
168182		1627 W GARVEY AVE	TROPHY CENTER	WEST COVINA	P	1955	PROJ.REVW.	FHWA020703A	09/06/02	6Y	
168180		1647 W GARVEY AVE		WEST COVINA	P	1955	PROJ.REVW.	FHWA020703A	09/06/02	6Y	
168178		2145 W GARVEY AVE	WEST COVINA DENTAL	WEST COVINA	P	1955	PROJ.REVW.	FHWA020703A	09/06/02	6Y	
168179		2101 W GARVEY AVE N		WEST COVINA	P	1955	PROJ.REVW.	FHWA020703A	09/06/02	6Y	
168183		1618 W HARBERT ST		WEST COVINA	P	1955	PROJ.REVW.	FHWA020703A	09/06/02	6Y	
168177		2231 W MOSSBERG AVE		WEST COVINA	P	1957	PROJ.REVW.	FHWA020703A	09/06/02	6Y	
027450	19-176774	8806 BEVERLY BLVD	HERMAN MILLER SHOWROOM, SQUARE ONE	WEST HOLLYWOOD	P	1949	HIST.SURV.	0069-0021-0000		7N	
027451	19-176775	9023 BEVERLY BLVD	CHASENS	WEST HOLLYWOOD	P	1931	HIST.SURV.	0069-0022-0000		3S	
082791		1201 CRESCENT HEIGHTS BLVD		WEST HOLLYWOOD	P	1931	PROJ.REVW.	HUD930406Z	07/19/93	6Y	
027421	19-176745	8341 DE LONGPRE AVE	WILLIAM S. HART HOUSE	WEST HOLLYWOOD	M	1919	HIST.RES.	DOE-19-94-0346-0000	03/18/94	2S4	
							PROJ.REVW.	HRG940202Z	03/18/94	2S4	
							ST.FND.PRG	619.0-HP-88-19-053	12/22/88	3	
							HIST.SURV.	0069-0004-0000		3S	
027434	19-176758	1041 FORMOSA AVE	PICKFORD FAIRBANKS STUDIO/GOLDWYN	WEST HOLLYWOOD	P	1920	HIST.SURV.	0069-0017-0000		3S	
027532	19-176856	FOUNTAIN AVE	FOUNTAIN CORRIDOR APARTMENT THEME	WEST HOLLYWOOD	P	1921	HIST.SURV.	0069-0050-9999		7R	
081474		7612 FOUNTAIN AVE		WEST HOLLYWOOD	U	1921	PROJ.REVW.	HUD871027C	01/13/93	6Y	
077944		7612 FOUNTAIN AVE		WEST HOLLYWOOD	U	1921	PROJ.REVW.	HUD921002E	01/13/93	6Y	
027419	19-176743	8225 FOUNTAIN AVE	PATIO DEL MORO	WEST HOLLYWOOD	P	1925	HIST.RES.	NPS-96000649-0001	06/28/96	1D	C

ROPERTY-NUMBER	PRIMARY-#	STREET.ADDRESS.....	NAMES.....	CITY.NAME.....	OWN	YR-C	OHP-PROG..	PRG-REFERENCE-NUMBER	STAT-DAT	NRS	CRIT
							HIST.SURV.	0069-0002-0000	12/01/87	7K	
							HIST.RES.	NPS-86002418-0000	09/11/86	1S	
103103		8250 FOUNTAIN AVE	LES MAISONETTES	WEST HOLLYWOOD	P	1927	HIST.RES.	NPS-96000694-0002	06/28/96	1D	C
103105		8264 FOUNTAIN AVE	AUTOMOTIVE GARAGE	WEST HOLLYWOOD	P	1927	HIST.RES.	NPS-96000694-0003	06/28/96	1D	C
027457	19-176781	7219 HAMPTON AVE	NORMANDIE TOWERS	WEST HOLLYWOOD	P	1924	PROJ.REVW.	HUD910331V	08/20/93	6Y	
							PROJ.REVW.	HUD9006136	07/17/90	2D2	C
							HIST.SURV.	0069-0023-9999		7N	
125530		947 HAVENHURST DR		WEST HOLLYWOOD	U	1924	HIST.RES.	DOE-19-97-0250-0000	10/06/97	6Y	
							PROJ.REVW.	HUD971006G	10/06/97	6Y	
027422	19-176746	1400 HAVENHURST DR	RONDA/MI CASA	WEST HOLLYWOOD	P	1927	HIST.RES.	NPS-85000356-0000	02/28/85	1S	
							HIST.SURV.	0069-0005-0000	02/28/85	1S	
							HIST.SURV.	0053-0356-0000	01/01/85	1S	
129112		1433 HAVENHURST DR		WEST HOLLYWOOD	P	1923	PROJ.REVW.	HUD021009N	10/09/02	7K	
							HIST.RES.	DOE-19-01-0234-0000	12/06/01	6Y	
							PROJ.REVW.	HUD010720A	12/06/01	6Y	
129111		1471 HAVENHURST DR		WEST HOLLYWOOD	P	1926	HIST.RES.	DOE-19-01-0233-0000	12/06/01	2S2	C
							PROJ.REVW.	HUD010720A	12/06/01	2S2	C
027548	19-176872	8752 HOLLOWAY DR		WEST HOLLYWOOD	P	1946	HIST.SURV.	0069-0052-0001		5D2	
027550	19-176874	8756 HOLLOWAY DR	LINGENBRINK COMMERCIAL GROUP	WEST HOLLYWOOD	P	1937	HIST.SURV.	0069-0052-9999		5S2	
027549	19-176873	8758 HOLLOWAY DR		WEST HOLLYWOOD	P	1937	HIST.SURV.	0069-0052-0002		5D2	
027458	19-176782	1216 LA CIENEGA BLVD	LOTUS APARTMENTS	WEST HOLLYWOOD	P	1928	HIST.SURV.	0069-0024-0000		7N	
027432	19-176756	1355 LAUREL AVE	VILLA D'ESTE	WEST HOLLYWOOD	P	1928	HIST.SURV.	0069-0015-0000		3S	
027433	19-176757	8687 MELROSE AVE	PACIFIC DESIGN CENTER	WEST HOLLYWOOD	P	1975	HIST.SURV.	0069-0016-0000		7N	
027510	19-176834	1201 N CRESCENT HEIGHTS BL	CRESCENT VILLA	WEST HOLLYWOOD	P	1931	HIST.SURV.	0069-0050-0001		5S2	
027425	19-176749	1285 N CRESCENT HEIGHTS BL	LA FONTAINE	WEST HOLLYWOOD	P	1928	HIST.SURV.	0069-0008-0000		3S	
152696		1330 N CRESCENT HEIGHTS BL		WEST HOLLYWOOD			HIST.RES.	DOE-19-05-0030-0000	02/28/05	6Y	
							PROJ.REVW.	HUD040809B	02/28/05	6Y	
152694		1340 N CRESCENT HEIGHTS BL		WEST HOLLYWOOD			HIST.RES.	DOE-19-05-0028-0000	02/28/05	6Y	
							PROJ.REVW.	HUD040809B	02/28/05	6Y	
152693		1344 N CRESCENT HEIGHTS BL		WEST HOLLYWOOD			HIST.RES.	DOE-19-05-0027-0000	02/28/05	6Y	
							PROJ.REVW.	HUD040809B	02/28/05	6Y	
152695		1350 N CRESCENT HEIGHTS BL		WEST HOLLYWOOD			HIST.RES.	DOE-19-05-0029-0000	02/28/05	6Y	
							PROJ.REVW.	HUD040809B	02/28/05	6Y	
027511	19-176835	1360 N CRESCENT HEIGHTS BL	THE SAVOY PLAZA	WEST HOLLYWOOD	P	1929	HIST.RES.	CR	05/17/01	1CS	BC
							CAL.REG.	19-0369	04/29/01	3CS	BC
							HIST.SURV.	0069-0050-0002		7N	
027512	19-176836	1400 N CRESCENT HEIGHTS BL	THE TUSCANY	WEST HOLLYWOOD	P	1925	HIST.SURV.	0069-0050-0003		7N	
027513	19-176837	1424 N CRESCENT HEIGHTS BL	THE GRANVILLE	WEST HOLLYWOOD	P	1930	HIST.SURV.	0069-0050-0004		7N	
125708		1247 N DETROIT ST		WEST HOLLYWOOD	U	1910	HIST.RES.	DOE-19-99-0351-0000	07/29/99	6Y	
							PROJ.REVW.	HUD990729D	07/29/99	6Y	
027418	19-176742	858 N DOHENY DR	LLOYD WRIGHT HOME AND STUDIO	WEST HOLLYWOOD	P	1927	HIST.RES.	NPS-87000562-0000	04/06/87	1S	
							HIST.SURV.	0069-0001-0000	01/01/87	1S	
027565	19-176889	9231 N DOHENY DR		WEST HOLLYWOOD	P	1937	HIST.SURV.	0069-0058-0000		5D2	
027488	19-176812	945 N FAIRFAX AVE	HOLLYWOOD DINER	WEST HOLLYWOOD	P	1934	HIST.SURV.	0069-0028-0000		7N	
083146		1230 N FAIRFAX AVE		WEST HOLLYWOOD	P	1914	PROJ.REVW.	HUD930325B	07/29/93	6Y	
027514	19-176838	1224 N FLORES ST		WEST HOLLYWOOD	P	1928	HIST.SURV.	0069-0050-0005		7N	
027515	19-176839	1230 N FLORES ST		WEST HOLLYWOOD	P	1928	HIST.SURV.	0069-0050-0006		5D2	
027516	19-176840	1236 N FLORES ST	THE 1236	WEST HOLLYWOOD	P	1931	HIST.SURV.	0069-0050-0007		3S	
027517	19-176841	1255 N FLORES ST	THE ROYAL GARDENS	WEST HOLLYWOOD	P	1927	HIST.SURV.	0069-0050-0008		3S	
027489	19-176813	1134 N FORMOSA AVE		WEST HOLLYWOOD	P	1910	HIST.SURV.	0069-0029-0000		7N	
094118		1221 N FORMOSA AVE		WEST HOLLYWOOD	P	1932	PROJ.REVW.	HUD940328AE	01/05/95	6Y	
125478		1252 N FULLER AVE		WEST HOLLYWOOD	P	1923	HIST.RES.	DOE-19-00-0154-0000	02/16/00	6Y	
							PROJ.REVW.	HUD000216G	02/16/00	6Y	
027493	19-176817	916 N GENESEE AVE	ADOBE	WEST HOLLYWOOD	P	1922	HIST.SURV.	0069-0033-0000		3S	
027547	19-176871	N HANCOCK AVE	CRAFTSMAN GROUPING	WEST HOLLYWOOD	P	1911	PROJ.REVW.	HUD950501D	06/22/95	6Y	
							HIST.SURV.	0069-0051-9999		5S2	

PROPERTY-NUMBER	PRIMARY-#	STREET.ADDRESS.....	NAMES.....	CITY.NAME.....	OWN	YR-C	OHP-PROG..	PRG-REFERENCE-NUMBER	STAT-DAT	NRS	CRIT
027494	19-176818	954 N HANCOCK AVE	COUNTY FIRE STATION #7	WEST HOLLYWOOD	M	1926	HIST.SURV.	0069-0034-0000		3S	
027533	19-176857	959 N HANCOCK AVE		WEST HOLLYWOOD	P	1912	HIST.SURV.	0069-0051-0001		5D2	
027461	19-176785	985 N HANCOCK AVE		WEST HOLLYWOOD	P	1910	HIST.SURV.	0069-0025-0003		5S2	
027462	19-176786	987 N HANCOCK AVE		WEST HOLLYWOOD	P	1925	HIST.SURV.	0069-0025-0004		6L	
027534	19-176858	991 N HANCOCK AVE		WEST HOLLYWOOD	P	1925	HIST.SURV.	0069-0051-0002		5D2	
027535	19-176859	995 N HANCOCK AVE		WEST HOLLYWOOD	P	1912	HIST.SURV.	0069-0051-0003		5D2	
027536	19-176860	1003 N HANCOCK AVE		WEST HOLLYWOOD	P	1912	HIST.SURV.	0069-0051-0004		5D2	
027537	19-176861	1010 N HANCOCK AVE		WEST HOLLYWOOD	P	1915	HIST.SURV.	0069-0051-0005		5D2	
027538	19-176862	1011 N HANCOCK AVE		WEST HOLLYWOOD	P	1931	HIST.SURV.	0069-0051-0006		5D2	
027539	19-176863	1013 N HANCOCK AVE		WEST HOLLYWOOD	P	1915	HIST.SURV.	0069-0051-0007		5D2	
027540	19-176864	1017 N HANCOCK AVE		WEST HOLLYWOOD	P	1911	HIST.SURV.	0069-0051-0008		5D2	
097482		N HARPER AVE	NORTH HARPER AVENUE HISTORIC DISTR	WEST HOLLYWOOD	P	1923	HIST.RES.	NPS-96000694-9999	06/28/96	1S	C
							NAT.REG.	19-0218	10/05/95	7J	
155044		N HARPER AVE	THE ROMONA NORTH BUILDING	WEST HOLLYWOOD	P	1923	HIST.RES.	NPS-05000274-0001	04/13/05	1D	C
155045		N HARPER AVE	THE RAMONA SOUTH BUILDING	WEST HOLLYWOOD	P	1923	HIST.RES.	NPS-05000274-0002	04/13/05	1D	C
155046		N HARPER AVE	THE RAMONA EAST BUILDING	WEST HOLLYWOOD	P	1923	HIST.RES.	NPS-05000274-0003	04/13/05	1D	C
155047		N HARPER AVE	THE RAMONA LOW WALL	WEST HOLLYWOOD	P	1923	HIST.RES.	NPS-05000274-0003	04/13/05	1D	C
148826		1236 N HARPER AVE	THE RAMONA	WEST HOLLYWOOD	P	1923	HIST.RES.	NPS-05000274-9999	04/13/05	1S	C
							NAT.REG.	19-0462	09/17/04	3S	C
027428	19-176752	1300 N HARPER AVE	MEXICAN VILLAGE/VILLA PRIMAVERA	WEST HOLLYWOOD	P	1923	HIST.RES.	NPS-96000694-0004	06/28/96	1D	C
							HIST.SURV.	0069-0011-0000		3S	
027429	19-176753	1301 N HARPER AVE	ROMANESQUE VILLA APARTMENTS	WEST HOLLYWOOD	P	1928	HIST.RES.	NPS-96000694-0005	06/28/96	1D	C
							HIST.SURV.	0069-0012-0000		3S	
103107		1312 N HARPER AVE		WEST HOLLYWOOD	P	1956	HIST.RES.	NPS-96000694-0006	06/28/96	6X	
027522	19-176846	1320 N HARPER AVE		WEST HOLLYWOOD	P	1992	HIST.RES.	NPS-96000694-0007	06/28/96	6X	
027523	19-176847	1322 N HARPER AVE		WEST HOLLYWOOD	P	1923	HIST.SURV.	0069-0050-0014		7N	
027524	19-176848	1324 N HARPER AVE		WEST HOLLYWOOD	P	1923	HIST.SURV.	0069-0050-0015		7N	
027525	19-176849	1330 N HARPER AVE	EL PASADERO	WEST HOLLYWOOD	P	1931	HIST.RES.	NPS-96000694-0008	06/28/96	1D	C
							HIST.SURV.	0069-0050-0016		7N	
027430	19-176754	1334 N HARPER AVE	CASA GRANDA APARTMENTS, HARPER HOU	WEST HOLLYWOOD	P	1929	HIST.RES.	NPS-96000694-0009	06/28/96	1D	C
							FED.FND.PR	629.0-94-HPP-01-01	06/07/95	7K	
							HIST.SURV.	0069-0013-0000		3S	
027431	19-176755	1338 N HARPER AVE	VILLA SEVILLA	WEST HOLLYWOOD	P	1931	HIST.RES.	NPS-96000694-0010	06/28/96	1D	C
							HIST.SURV.	0069-0014-0000		3S	
103108		1354 N HARPER AVE	CASA REAL	WEST HOLLYWOOD	P	1931	HIST.RES.	NPS-96000694-0011	06/28/96	1D	C
027526	19-176850	1238 N HAVENHURST DR		WEST HOLLYWOOD	P	1924	HIST.SURV.	0069-0050-0017		7N	
027423	19-176747	1416 N HAVENHURST DR	COLONIAL HOUSE	WEST HOLLYWOOD	P	1930	HIST.RES.	NPS-82002190-0000	04/15/82	1S	C
							HIST.SURV.	0053-0327-0000	04/15/82	1S	C
							HIST.SURV.	0069-0006-0000	04/15/82	1S	C
027527	19-176851	1275 N HAYWORTH AVE		WEST HOLLYWOOD	P	1927	HIST.SURV.	0069-0050-0018		5S2	
027528	19-176852	1314 N HAYWORTH AVE	HAYWORTH TOWER	WEST HOLLYWOOD	P	1931	HIST.SURV.	0069-0050-0019		3S	
167793		1342 N HAYWORTH AVE	VALENTINO COURT	WEST HOLLYWOOD	P	1924	NAT.REG.	19-0508	10/18/07	7J	
027529	19-176853	1414 N HAYWORTH AVE	CORTE LINDA VISTA	WEST HOLLYWOOD	P	1927	HIST.SURV.	0069-0050-0020		7N	
027567	19-176891	1114 N HORN AVE	CAFE GALA, SPAGOS	WEST HOLLYWOOD	P	1922	HIST.SURV.	0069-0058-0002		7N	
000007	19-176485	833 N KINGS RD	SCHINDLER, R. M. HOUSE	WEST HOLLYWOOD	P	1921	ST.FND.PRG	619.0-84-HP-19-082	10/01/86	3	
							HIST.SURV.	NPS-71000150-0000	07/14/71	1S	C
027495	19-176819	652 N LA PEER AVE	MITCHELL CAMERA MANUFACTURING CO,	WEST HOLLYWOOD	P	1931	HIST.SURV.	0069-0035-0000		3S	
027463	19-176787	825 N LARRABEE ST		WEST HOLLYWOOD	P	1905	HIST.SURV.	0069-0025-0005		7N	
027464	19-176788	829 N LARRABEE ST		WEST HOLLYWOOD	P	1908	HIST.SURV.	0069-0025-0006		7N	
027465	19-176789	858 N LARRABEE ST		WEST HOLLYWOOD	P	1905	HIST.SURV.	0069-0025-0007		5S2	
027562	19-176886	1000 N LARRABEE ST	ENGLISH VILLAGE	WEST HOLLYWOOD	P	1924	HIST.SURV.	0069-0055-9999		7N	
152697		1327 N LAUREL AVE		WEST HOLLYWOOD	U		HIST.RES.	DOE-19-05-0031-0000	02/28/05	6Y	
							PROJ.REVW.	HUD040809B	02/28/05	6Y	

PROPERTY-NUMBER	PRIMARY-#	STREET.ADDRESS.....	NAMES.....	CITY.NAME.....	OWN	YR-C	OHP-PROG..	PRG-REFERENCE-NUMBER	STAT-DAT	NRS	CRIT
027530	19-176854	1334 N LAUREL AVE		WEST HOLLYWOOD	P	1927	HIST.RES.	DOE-19-05-0026-0000	02/28/05	2S2	C
							PROJ.REVW.	HUD040809B	02/28/05	2S2	C
							HIST.SURV.	0069-0050-0021		7N	
027496	19-176820	1343 N LAUREL AVE		WEST HOLLYWOOD	P	1924	TAX.CERT.	537.9-19-0384	04/04/08	2S3	A
							HIST.RES.	DOE-19-05-0024-0000	02/28/05	2S2	A
							PROJ.REVW.	HUD040809B	02/28/05	2S2	A
							HIST.SURV.	0069-0036-0000		5S2	
152698	+	1346 N LAUREL AVE		WEST HOLLYWOOD			HIST.RES.	DOE-19-05-0031-0000	02/28/05	6Y	
							PROJ.REVW.	HUD040809B	02/28/05	6Y	
152691		1355 N LAUREL AVE		WEST HOLLYWOOD			HIST.RES.	DOE-19-05-0025-0000	02/28/05	2S2	
							PROJ.REVW.	HUD040809B	02/28/05	2S	
027486	19-176810	1326 N OLIVE DR		WEST HOLLYWOOD	P	1936	HIST.SURV.	0069-0027-0002		5D2	
027499	19-176823	1035 N ORANGE GROVE AVE	WEST HOLLYWOOD SOUTHERN CALIFORNIA	WEST HOLLYWOOD	P	1929	HIST.SURV.	0069-0039-0000		5S2	
125514		1206 N ORANGE GROVE AVE		WEST HOLLYWOOD	U	1921	HIST.RES.	DOE-19-97-0233-0000	10/06/97	6Y	
							PROJ.REVW.	HUD971006G	10/06/97	6Y	
027466	19-176790	927 N PALM AVE		WEST HOLLYWOOD	P	1902	HIST.SURV.	0069-0025-0008		3S	
027467	19-176791	931 N PALM AVE		WEST HOLLYWOOD	P	1902	HIST.SURV.	0069-0025-0009		3S	
027468	19-176792	950 N PALM AVE		WEST HOLLYWOOD	P	1909	HIST.SURV.	0069-0025-0010		7N	
027541	19-176865	976 N PALM AVE		WEST HOLLYWOOD	P	1927	HIST.SURV.	0069-0051-0009		5D2	
027543	19-176867	978 N PALM AVE		WEST HOLLYWOOD	P	1915	HIST.SURV.	0069-0051-0011		5D2	
027544	19-176868	980 N PALM AVE		WEST HOLLYWOOD	P	1915	HIST.SURV.	0069-0051-0012		5D2	
027545	19-176869	982 N PALM AVE		WEST HOLLYWOOD	P	1915	HIST.SURV.	0069-0051-0013		5D2	
027546	19-176870	984 N PALM AVE		WEST HOLLYWOOD	P	1915	HIST.SURV.	0069-0051-0014		5D2	
027542	19-176866	986 N PALM AVE		WEST HOLLYWOOD	P	1915	HIST.SURV.	0069-0051-0010		5D2	
027500	19-176824	623 N ROBERTSON BLVD	BOY SCOUTS OF AMERICA CLUBHOUSE, L	WEST HOLLYWOOD	P	1928	HIST.SURV.	0069-0040-0000		3S	
027501	19-176825	824 N ROBERTSON BLVD	CRISTOEFELLES LACE FACTORY, TONY D	WEST HOLLYWOOD	P	1924	HIST.SURV.	0069-0041-0000		5S2	
027502	19-176826	343 N SAN VICENTE BLVD	TAIL O' THE PUP	WEST HOLLYWOOD	P	1938	HIST.SURV.	0069-0042-0000		7N	
027469	19-176793	837 N SAN VICENTE BLVD		WEST HOLLYWOOD	P	1905	HIST.SURV.	0069-0025-0011		7N	
027470	19-176794	838 N SAN VICENTE BLVD		WEST HOLLYWOOD	P	1905	HIST.SURV.	0069-0025-0012		7N	
027471	19-176795	840 N SAN VICENTE BLVD		WEST HOLLYWOOD	P	1905	HIST.SURV.	0069-0025-0013		7N	
027472	19-176796	843 N SAN VICENTE BLVD		WEST HOLLYWOOD	P	1907	HIST.SURV.	0069-0025-0014		7N	
027473	19-176797	847 N SAN VICENTE BLVD		WEST HOLLYWOOD	P	1915	HIST.SURV.	0069-0025-0015		7N	
027474	19-176798	849 N SAN VICENTE BLVD		WEST HOLLYWOOD	P	1905	HIST.SURV.	0069-0025-0016		7N	
027475	19-176799	850 N SAN VICENTE BLVD		WEST HOLLYWOOD	P	1898	HIST.SURV.	0069-0025-0017		7N	
027476	19-176800	853 N SAN VICENTE BLVD		WEST HOLLYWOOD	P	1905	HIST.SURV.	0069-0025-0018		7N	
027477	19-176801	863 N SAN VICENTE BLVD		WEST HOLLYWOOD	P	1902	HIST.SURV.	0069-0025-0019		7N	
027478	19-176802	864 N SAN VICENTE BLVD		WEST HOLLYWOOD	P	1905	HIST.SURV.	0069-0025-0020		7N	
027479	19-176803	873 N SAN VICENTE BLVD		WEST HOLLYWOOD	P	1899	HIST.SURV.	0069-0025-0021		3S	
027480	19-176804	883 N SAN VICENTE BLVD		WEST HOLLYWOOD	P	1901	HIST.SURV.	0069-0025-0022		7N	
027481	19-176805	889 N SAN VICENTE BLVD		WEST HOLLYWOOD	P	1900	HIST.SURV.	0069-0025-0023		7N	
027482	19-176806	935 N SAN VICENTE BLVD		WEST HOLLYWOOD	P	1905	HIST.SURV.	0069-0025-0024		7N	
027506	19-176830	900 N SIERRA BONITA AVE		WEST HOLLYWOOD	P	1928	HIST.SURV.	0069-0046-0000		7N	
027508	19-176832	819 N SWEETZER AVE		WEST HOLLYWOOD	P	1928	HIST.SURV.	0069-0048-0000		7N	
027509	19-176833	827 N SWEETZER AVE		WEST HOLLYWOOD	P	1929	HIST.SURV.	0069-0049-0000		7N	
027531	19-176855	1233 N SWEETZER AVE	CORAL GABLES	WEST HOLLYWOOD	P	1932	HIST.SURV.	0069-0050-0022		5S2	
027436	19-176760	1302 N SWEETZER AVE	EL MIRADOR	WEST HOLLYWOOD	P	1929	HIST.SURV.	0069-0019-0000		3S	
027561	19-176885	N VISTA DR	PLUMMER PARK APARTMENTS GROUP	WEST HOLLYWOOD	P	1929	HIST.SURV.	0069-0054-9999		7N	
027556	19-176880	1124 N VISTA DR		WEST HOLLYWOOD	P	1929	HIST.SURV.	0069-0054-0001		7N	
027557	19-176881	1128 N VISTA DR		WEST HOLLYWOOD	P	1929	HIST.SURV.	0069-0054-0002		7N	
027558	19-176882	1132 N VISTA DR		WEST HOLLYWOOD	P	1929	HIST.SURV.	0069-0054-0003		7N	
027559	19-176883	1140 N VISTA DR		WEST HOLLYWOOD	P	1929	HIST.SURV.	0069-0054-0004		7N	
027560	19-176884	1144 N VISTA DR		WEST HOLLYWOOD	P	1929	HIST.SURV.	0069-0054-0005		7N	
082802		355 N WESTBORNE PL		WEST HOLLYWOOD	P	1925	PROJ.REVW.	HUD930517N	07/19/93	6Y	
027564	19-176888	903 N WESTHOURNE AVE	COUNTY LIBRARY	WEST HOLLYWOOD	P	1922	HIST.SURV.	0069-0057-0000		3S	
083764		8991 NORMA PL		WEST HOLLYWOOD	U	1923	PROJ.REVW.	HUD910331O	08/20/93	6Y	
125569		537 NORWICH DR		WEST HOLLYWOOD	U	1916	HIST.RES.	DOE-19-97-0271-0000	10/06/97	6Y	

PROPERTY-NUMBER	PRIMARY-#	STREET.ADDRESS.....	NAMES.....	CITY.NAME.....	OWN	YR-C	OHP-PROG..	PRG-REFERENCE-NUMBER	STAT-DAT	NRS	CRIT
							PROJ.REVW.	HUD971006F	10/06/97	6Y	
027456	19-176780	1234 POINSETTIA PL		WEST HOLLYWOOD	P	1924	HIST.SURV.	0069-0023-0005		7N	
027452	19-176776	1236 POINSETTIA PL		WEST HOLLYWOOD	P	1924	HIST.SURV.	0069-0023-0001		7N	
027454	19-176778	1238 POINSETTIA PL		WEST HOLLYWOOD	P	1924	HIST.SURV.	0069-0023-0003		7N	
027453	19-176777	1240 POINSETTIA PL		WEST HOLLYWOOD	P	1924	HIST.SURV.	0069-0023-0002		7N	
027455	19-176779	1242 POINSETTIA PL		WEST HOLLYWOOD	P	1924	HIST.SURV.	0069-0023-0004		7N	
094117		8724 RANGELY AVE		WEST HOLLYWOOD	P	1926	PROJ.REVW.	HUD940328AD	01/05/95	6Y	
027483	19-176807	SAN VICENTE BLVD	SHERMAN, OLD SHERMAN THEMATIC GROU	WEST HOLLYWOOD	P	1898	HIST.SURV.	0069-0025-9999		7R	
079367		0 SANTA MONICA BLVD	SANTA MONICA BOULEVARD HISTORIC DI	WEST HOLLYWOOD	U	0	HIST.RES.	DOE-19-92-0052-9999	11/16/92	2S2	A
							PROJ.REVW.	HUD921013D	11/16/92	2S2	A
027587	19-176911	7155 SANTA MONICA BLVD	COMMERCIAL REHABILITATION	WEST HOLLYWOOD	P	1928	HIST.SURV.	0069-0060-0000	02/08/88	7R	
							PROJ.REVW.	HUD880119G	02/08/88	6Y	
079362		7200 SANTA MONICA BLVD	UNITED ARTISTS/SAMUEL GOLDWYN STUD	WEST HOLLYWOOD	U	1919	HIST.RES.	DOE-19-92-0051-0000	11/16/92	2S2	A
							PROJ.REVW.	HUD921013D	11/16/92	2S2	A
081594		7235 SANTA MONICA BLVD		WEST HOLLYWOOD	U	1922	PROJ.REVW.	HUD871027C	08/29/89	6Y	
065121		7362 SANTA MONICA BLVD		WEST HOLLYWOOD	U		PROJ.REVW.	HUD870312E	04/07/87	6Y	
098374		7377 SANTA MONICA BLVD	WEST HOLLYWOOD COMMUNITY CENTER	WEST HOLLYWOOD	M	1937	HIST.RES.	DOE-19-94-0270-0000	07/31/94	6Y	
							PROJ.REVW.	HRG940202Z	07/31/94	6Y	
083531		7400 SANTA MONICA BLVD	VANETTA BLDG	WEST HOLLYWOOD	P	1928	HIST.RES.	DOE-19-03-0086-0000	03/20/03	6Y	
							PROJ.REVW.	FCC030214A	03/20/03	6Y	
							PROJ.REVW.	HUD900331n	08/16/93	6Y	
065124		7414 SANTA MONICA BLVD		WEST HOLLYWOOD	U		PROJ.REVW.	HUD870312H	04/07/87	6Y	
065126		7415 SANTA MONICA BLVD		WEST HOLLYWOOD	U	1930	PROJ.REVW.	HUD871027C	08/29/89	6Y	
							PROJ.REVW.	HUD870312J	04/07/87	6Y	
081596		7512 SANTA MONICA BLVD		WEST HOLLYWOOD	U	1924	PROJ.REVW.	HUD911015b	08/26/93	6Y	
							PROJ.REVW.	HUD871027C	08/29/89	6Y	
081595		7541 SANTA MONICA BLVD		WEST HOLLYWOOD	U	1926	PROJ.REVW.	HUD871027C	08/29/89	6Y	
083897		7544 SANTA MONICA BLVD		WEST HOLLYWOOD	U	1923	PROJ.REVW.	HUD911015f	08/26/93	6Y	
081676		7545 SANTA MONICA BLVD		WEST HOLLYWOOD	U	1911	PROJ.REVW.	HUD871027C	10/30/89	6Y	
083891		7626 SANTA MONICA BLVD		WEST HOLLYWOOD	U	1930	PROJ.REVW.	HUD911015W	08/26/93	6Y	
065132		7630 SANTA MONICA BLVD		WEST HOLLYWOOD	U		PROJ.REVW.	HUD870312P	04/07/87	6Y	
066738		7643 SANTA MONICA BLVD	LOS ANGELES COUNTY FIRE STATION #8	WEST HOLLYWOOD	C	1949	HIST.RES.	DOE-19-92-0053-0000	11/16/92	7K	
							PROJ.REVW.	HUD921013D	11/16/92	7K	
							HIST.RES.	DOE-19-88-0006-0000	07/18/88	2S2	C
							PROJ.REVW.	HUD880419A	07/18/88	2S2	C
065128		7702 SANTA MONICA BLVD		WEST HOLLYWOOD	U		PROJ.REVW.	HUD870312L	04/07/87	6Y	
027588	19-176912	7706 SANTA MONICA BLVD	LELYAS CLOTHES	WEST HOLLYWOOD	P	1923	PROJ.REVW.	HUD900331p	08/16/93	6Y	
							HIST.SURV.	0069-0061-0000		7R	
027589	19-176913	7708 SANTA MONICA BLVD	POLLY'S PLUMBING	WEST HOLLYWOOD	P	1924	HIST.SURV.	0069-0062-0000		7R	
							PROJ.REVW.	HUD871221V	01/21/88	6Y	
065127		7722 SANTA MONICA BLVD		WEST HOLLYWOOD	U		PROJ.REVW.	HUD870312K	04/07/87	6Y	
083892		7739 SANTA MONICA BLVD		WEST HOLLYWOOD	U	1928	PROJ.REVW.	HUD911015Z	08/26/93	6Y	
065122		7740 SANTA MONICA BLVD		WEST HOLLYWOOD	U		PROJ.REVW.	HUD870312F	04/07/87	6Y	
065123		7744 SANTA MONICA BLVD		WEST HOLLYWOOD	U		PROJ.REVW.	HUD870312G	04/07/87	6Y	
065130		7746 SANTA MONICA BLVD		WEST HOLLYWOOD	U		PROJ.REVW.	HUD870312N	04/07/87	6Y	
065131		7748 SANTA MONICA BLVD		WEST HOLLYWOOD	U		PROJ.REVW.	HUD870312O	04/07/87	6Y	
083893		7748 SANTA MONICA BLVD		WEST HOLLYWOOD	U	1928	PROJ.REVW.	HUD911015a	08/26/93	6Y	
065129		7750 SANTA MONICA BLVD		WEST HOLLYWOOD	U		PROJ.REVW.	HUD870312M	04/07/87	6Y	
083899		7754 SANTA MONICA BLVD		WEST HOLLYWOOD	U	1923	PROJ.REVW.	HUD911106A	08/26/93	6Y	
083532		7763 SANTA MONICA BLVD		WEST HOLLYWOOD	U	1926	PROJ.REVW.	HUD900331o	08/16/93	6Y	
065125		7807 SANTA MONICA BLVD		WEST HOLLYWOOD	U		PROJ.REVW.	HUD870312I	04/07/87	6Y	
066421		7814 SANTA MONICA BLVD	COMMERCIAL REHABILITATION	WEST HOLLYWOOD	U		PROJ.REVW.	HUD871221Y	01/21/88	6Y	
027590	19-176914	7814 SANTA MONICA BLVD	GITSIS FARMERS MARKET	WEST HOLLYWOOD	P	1924	HIST.SURV.	0069-0063-0000		7R	
027591	19-176915	7819 SANTA MONICA BLVD	FURNITURE DESIGN CENTER	WEST HOLLYWOOD	P	1918	HIST.SURV.	0069-0064-0000		7R	
066422		7819 SANTA MONICA BLVD	COMMERCIAL REHABILITATION	WEST HOLLYWOOD	U		PROJ.REVW.	HUD871221Z	01/21/88	6Y	
081593		7823 SANTA MONICA BLVD		WEST HOLLYWOOD	U	1926	PROJ.REVW.	HUD871027C	08/29/89	6Y	

PROPERTY-NUMBER	PRIMARY-#	STREET.ADDRESS.....	NAMES.....	CITY.NAME.....	OWN	YR-C	OHP-PROG..	PRG-REFERENCE-NUMBER	STAT-DAT	NRS	CRIT
081592		7854 SANTA MONICA BLVD		WEST HOLLYWOOD	U	1922	PROJ.REVW.	HUD871027C	08/29/89	6Y	
027592	19-176916	7858 SANTA MONICA BLVD	COMMERICAL REHABILITATION	WEST HOLLYWOOD	P	1921	PROJ.REVW.	HUD871221X	01/21/88	6Y	
							HIST.SURV.	0069-0065-0000		7R	
079366		7900 SANTA MONICA BLVD		WEST HOLLYWOOD	U		HIST.RES.	DOE-19-92-0052-0004	11/16/92	2D2	A
							PROJ.REVW.	HUD921013D	11/16/92	2D2	A
079365		7908 SANTA MONICA BLVD		WEST HOLLYWOOD	U	0	HIST.RES.	DOE-19-92-0052-0003	11/16/92	6Y	
							PROJ.REVW.	HUD921013D	11/16/92	6Y	
079364		7916 SANTA MONICA BLVD		WEST HOLLYWOOD	U	0	HIST.RES.	DOE-19-92-0052-0002	11/16/92	2D2	A
							PROJ.REVW.	HUD921013D	11/16/92	2D2	A
079363		7924 SANTA MONICA BLVD		WEST HOLLYWOOD	U	0	HIST.RES.	DOE-19-92-0052-0001	11/16/92	2D2	A
							PROJ.REVW.	HUD921013D	11/16/92	2D2	A
083306		7929 SANTA MONICA BLVD		WEST HOLLYWOOD	U	1912	PROJ.REVW.	HUD891231Z	08/05/93	6Y	
081591		7994 SANTA MONICA BLVD		WEST HOLLYWOOD	U	1925	PROJ.REVW.	HUD871027C	08/29/89	6Y	
081598		8001 SANTA MONICA BLVD		WEST HOLLYWOOD	U	1922	PROJ.REVW.	HUD871027C	08/29/89	6Y	
081590		8042 SANTA MONICA BLVD		WEST HOLLYWOOD	U	1923	PROJ.REVW.	HUD871027C	08/29/89	6Y	
083288		8220 SANTA MONICA BLVD		WEST HOLLYWOOD	U	1924	PROJ.REVW.	HUD891231I	08/04/93	6Y	
081597		8228 SANTA MONICA BLVD		WEST HOLLYWOOD	U	1920	PROJ.REVW.	HUD871027C	08/29/89	6Y	
178009		8235 SANTA MONICA BLVD	BALBOA GOLF COURSE	WEST HOLLYWOOD	P	1962	PROJ.REVW.	FCC091021E	01/13/10	6Y	
083307		8236 SANTA MONICA BLVD	8236-8240 SANTA MONICA BOULEVARD	WEST HOLLYWOOD	U	1920	PROJ.REVW.	HUD891231a	08/05/93	6Y	
083556		8246 SANTA MONICA BLVD		WEST HOLLYWOOD	U	1926	PROJ.REVW.	HUD900331mm	08/16/93	6Y	
083877		8248 SANTA MONICA BLVD		WEST HOLLYWOOD	U	1926	PROJ.REVW.	HUD911015I	08/26/93	6Y	
083557		8250 SANTA MONICA BLVD	8250-50 1/2 SANTA MONICA BOULEVARD	WEST HOLLYWOOD	U	1925	PROJ.REVW.	HUD900331nn	08/16/93	6Y	
027503	19-176827	8431 SANTA MONICA BLVD	BEKINS STORAGE WAREHOUSE, EMSER TI	WEST HOLLYWOOD	P	1926	HIST.SURV.	0069-0043-0000		7N	
027563	19-176887	8811 SANTA MONICA BLVD	FIRST NATIONAL BANK OF SHERMAN	WEST HOLLYWOOD	P	1922	HIST.SURV.	0069-0056-0000		7N	
083727		1240 SPAULDING AVE		WEST HOLLYWOOD	U	1922	PROJ.REVW.	HUD901231E	08/18/93	6Y	
027449	19-176773	SUNSET BLVD	SUNSET PLAZA, SUNSET PLAZA DISTRIC	WEST HOLLYWOOD	P	1934	HIST.SURV.	0069-0020-9999		3S	
027585	19-176909	SUNSET BLVD	SUNSET STRIP, SUNSET STRIP DISTRIC	WEST HOLLYWOOD	P	1935	HIST.SURV.	0069-0058-9999		5S2	
158644		8272 SUNSET BLVD	CALDWELL BANKER	WEST HOLLYWOOD	P	1939	PROJ.REVW.	FCC051213J	01/09/06	6Y	
027424	19-176748	8358 SUNSET BLVD	SUNSET TOWER	WEST HOLLYWOOD	P	1929	HIST.SURV.	0069-0007-0000	12/01/87	1S	
							TAX.CERT.	537.9-19-0158	11/22/85	7K	
							HIST.RES.	NPS-80000812-0000	05/30/80	1S	
027426	19-176750	8439 SUNSET BLVD	CORONET APARTMENTS HACIENDA ARMS,	WEST HOLLYWOOD	P	1927	HIST.SURV.	0069-0009-0000	01/01/86	1S	
							TAX.CERT.	537.9-19-0125	10/09/85	7K	
076950		8439 SUNSET BLVD	HACIENDA ARMS APARTMENTS	WEST HOLLYWOOD	P	1927	HIST.RES.	NPS-83003531-0000	12/15/83	1S	C
							HIST.SURV.	0053-4687-0000	12/15/83	1S	C
027507	19-176831	8585 SUNSET BLVD	BEN FRANKS COFFEE HOUSE	WEST HOLLYWOOD	P	1959	HIST.SURV.	0069-0047-0000		7N	
027439	19-176763	8589 SUNSET BLVD		WEST HOLLYWOOD	P	1934	HIST.SURV.	0069-0020-0003		3D	
027438	19-176762	8600 SUNSET BLVD		WEST HOLLYWOOD	P	1934	HIST.SURV.	0069-0020-0002		3D	
027437	19-176761	8601 SUNSET BLVD		WEST HOLLYWOOD	P	1934	HIST.SURV.	0069-0020-0000		3D	
027440	19-176764	8610 SUNSET BLVD	TROCADERO STEPS	WEST HOLLYWOOD	P	1934	HIST.SURV.	0069-0020-0004		3D	
027441	19-176765	8616 SUNSET BLVD		WEST HOLLYWOOD	P	1934	HIST.SURV.	0069-0020-0005		5S2	
027442	19-176766	8619 SUNSET BLVD		WEST HOLLYWOOD	P	1934	HIST.SURV.	0069-0020-0006		3D	
027443	19-176767	8623 SUNSET BLVD		WEST HOLLYWOOD	P	1934	HIST.SURV.	0069-0020-0007		3D	
027444	19-176768	8625 SUNSET BLVD		WEST HOLLYWOOD	P	1934	HIST.SURV.	0069-0020-0008		3D	
027445	19-176769	8630 SUNSET BLVD		WEST HOLLYWOOD	P	1934	HIST.SURV.	0069-0020-0009		3D	
027446	19-176770	8641 SUNSET BLVD		WEST HOLLYWOOD	P	1934	HIST.SURV.	0069-0020-0010		3D	
027447	19-176771	8657 SUNSET BLVD		WEST HOLLYWOOD	P	1934	HIST.SURV.	0069-0020-0011		3D	
027448	19-176772	8720 SUNSET BLVD		WEST HOLLYWOOD	P	1934	HIST.SURV.	0069-0020-0012		3D	
179089		8730 SUNSET BLVD	SUNSET TOWERS	WEST HOLLYWOOD	Y		PROJ.REVW.	FCC091119O	03/02/10	6Y	
027584	19-176908	8735 SUNSET BLVD		WEST HOLLYWOOD	P	1936	HIST.SURV.	0069-0058-0019		5D2	
027583	19-176907	8776 SUNSET BLVD		WEST HOLLYWOOD	P	1935	HIST.SURV.	0069-0058-0018		5D2	
027582	19-176906	8782 SUNSET BLVD	OLD WORLD RESTAURANT	WEST HOLLYWOOD	P	1936	HIST.SURV.	0069-0058-0017		5D2	
027581	19-176905	8866 SUNSET BLVD		WEST HOLLYWOOD	P	1936	HIST.SURV.	0069-0058-0016		5D2	
027580	19-176904	8901 SUNSET BLVD	WHISKEY A GO-GO	WEST HOLLYWOOD	P	1928	HIST.SURV.	0069-0058-0015		7N	
027579	19-176903	8949 SUNSET BLVD	GABE BURNETT BUILDING	WEST HOLLYWOOD	P	1937	HIST.SURV.	0069-0058-0014		7N	
027578	19-176902	9009 SUNSET BLVD	WESTSIDE MARKET, THE ROXY	WEST HOLLYWOOD	P	1937	HIST.SURV.	0069-0058-0013		5D2	

ROPERTY-NUMBER	PRIMARY-#	STREET.ADDRESS.....	NAMES.....	CITY.NAME.....	OWN	YR-C	OHP-PROG..	PRG-REFERENCE-NUMBER	STAT-DAT	NRS	CRIT
027577	19-176901	9015 SUNSET BLVD	VILLA NOVA, RAINBOW GRILL	WEST HOLLYWOOD	P	1935	HIST.SURV.	0069-0058-0012		5D2	
027576	19-176900	9016 SUNSET BLVD	STOP BAR	WEST HOLLYWOOD	P	1934	HIST.SURV.	0069-0058-0011		5D2	
027575	19-176899	9028 SUNSET BLVD	CROSBY BUILDING	WEST HOLLYWOOD	P	1937	HIST.SURV.	0069-0058-0010		7N	
027574	19-176898	9101 SUNSET BLVD	MAXIMES	WEST HOLLYWOOD	P	1925	HIST.SURV.	0069-0058-0009		5D2	
027573	19-176897	9111 SUNSET BLVD		WEST HOLLYWOOD	P	1936	HIST.SURV.	0069-0058-0008		5D2	
027572	19-176896	9118 SUNSET BLVD	DAVID GEFFEN BUILDINGS	WEST HOLLYWOOD	P	1935	HIST.SURV.	0069-0058-0007		7N	
027570	19-176894	9121 SUNSET BLVD		WEST HOLLYWOOD	P	1935	HIST.SURV.	0069-0058-0005		5D2	
027571	19-176895	9131 SUNSET BLVD	SKOL SCANDIA LA TAVERNA, VERITAS	WEST HOLLYWOOD	P	1935	HIST.SURV.	0069-0058-0006		5D2	
027569	19-176893	9159 SUNSET BLVD	BERMAN BUILDING	WEST HOLLYWOOD	P	1937	HIST.SURV.	0069-0058-0004		7N	
027568	19-176892	9165 SUNSET BLVD	PAUL KOHNER BUILDING	WEST HOLLYWOOD	P	1937	HIST.SURV.	0069-0058-0003		7N	
027459	19-176783	8914 W CYNTHIA ST		WEST HOLLYWOOD	P	1905	HIST.SURV.	0069-0025-0001		7N	
027460	19-176784	8924 W CYNTHIA ST		WEST HOLLYWOOD	P	0	HIST.SURV.	0069-0025-0002		3S	
027484	19-176808	9025 W CYNTHIA ST	DUTCH REFORMED CHURCH, FIRST BAPTI	WEST HOLLYWOOD	P	1924	HIST.SURV.	0069-0026-0000		3S	
027487	19-176811	W DELONGPRE AVE		WEST HOLLYWOOD	P	1936	HIST.SURV.	0069-0027-9999		5S2	
027485	19-176809	8477 W DELONGPRE AVE		WEST HOLLYWOOD	P	1936	HIST.SURV.	0069-0027-0001		5D2	
027566	19-176890	9231 W DOHENY RD		WEST HOLLYWOOD	P	1937	HIST.SURV.	0069-0058-0001		5D2	
027490	19-176814	7870 W FOUNTAIN AVE	CRESCENT HEIGHTS METHODIST CHURCH,	WEST HOLLYWOOD	P	1924	HIST.SURV.	0069-0030-0000		5S2	
027491	19-176815	7950 W FOUNTAIN AVE		WEST HOLLYWOOD	P	1925	HIST.SURV.	0069-0031-0000		3S	
027492	19-176816	7960 W FOUNTAIN AVE		WEST HOLLYWOOD	P	1925	HIST.SURV.	0069-0032-0000		5S2	
027586	19-176910	8228 W FOUNTAIN AVE	FRANK LLOYD WRIGHT STUDIO SITE	WEST HOLLYWOOD	P	1922	HIST.SURV.	0069-0059-0000		7R	
027518	19-176842	8250 W FOUNTAIN AVE	FOUR GABLES	WEST HOLLYWOOD	P	1927	HIST.SURV.	0069-0050-0009		7N	
027519	19-176843	8320 W FOUNTAIN AVE		WEST HOLLYWOOD	P	1928	HIST.SURV.	0069-0050-0010		3S	
027520	19-176844	8352 W FOUNTAIN AVE		WEST HOLLYWOOD	P	1926	HIST.SURV.	0069-0050-0011		7N	
027521	19-176845	8468 W FOUNTAIN AVE		WEST HOLLYWOOD	P	1939	HIST.SURV.	0069-0050-0012		5S2	
027427	19-176751	8491 W FOUNTAIN AVE	EL PALACIO	WEST HOLLYWOOD	P	1931	HIST.SURV.	0069-0010-0000		3S	
027497	19-176821	8952 W NORMA PL		WEST HOLLYWOOD	P	1921	HIST.SURV.	0069-0037-0000		5S2	
027498	19-176822	8121 W NORTON AVE		WEST HOLLYWOOD	P	1914	HIST.SURV.	0069-0038-0000		7N	
027555	19-176879	7900 W SANTA MONICA BLVD	SANTA MONICA COMMERCIAL GROUP	WEST HOLLYWOOD	P	1925	HIST.SURV.	0069-0053-9999		5S2	
027551	19-176875	7900 W SANTA MONICA BLVD		WEST HOLLYWOOD	P	1926	HIST.SURV.	0069-0053-0001		7N	
027552	19-176876	7908 W SANTA MONICA BLVD		WEST HOLLYWOOD	P	1929	HIST.SURV.	0069-0053-0002		7N	
027553	19-176877	7916 W SANTA MONICA BLVD	FACADE IMPROVEMENTS	WEST HOLLYWOOD	P	1925	PROJ.REVW.	HUD890525E	06/22/89	2	AC
							HIST.SURV.	0069-0053-0003		5D2	
027554	19-176878	7924 W SANTA MONICA BLVD		WEST HOLLYWOOD	P	1925	HIST.SURV.	0069-0053-0004		5D2	
027504	19-176828	8447 W SANTA MONICA BLVD	BARNEY'S BEANERY	WEST HOLLYWOOD	P	1924	HIST.SURV.	0069-0044-0000		5S2	
027435	19-176759	8701 W SANTA MONICA BLVD		WEST HOLLYWOOD	P	1928	HIST.SURV.	0069-0018-0000		3S	
027505	19-176829	8851 W SANTA MONICA BLVD	WEST HOLLYWOOD PROFESSIONAL BLDG	WEST HOLLYWOOD	P	1926	HIST.SURV.	0069-0045-0000		5S2	
180270		8300 W SUNSET BLVD	STANDARD HOTEL	WEST HOLLYWOOD	P	1962	PROJ.REVW.	FCC100325B	05/12/10	2S2	C
170437		9145 W SUNSET BLVD		WEST HOLLYWOOD	P	1956	PROJ.REVW.	FCC080116A	02/29/08	6Y	
020712	19-176728	1160 W 102ND ST		WESTMONT	P	1932	HIST.SURV.	0044-0002-0000		7R	
020713	19-176729	1216 W 103RD ST		WESTMONT	P	1923	HIST.SURV.	0044-0003-0000		7R	
020715	19-176731	1532 W 104TH ST		WESTMONT	P	1927	HIST.SURV.	0044-0005-0000		7R	
020716	19-176732	1649 W 107TH ST		WESTMONT	P	1939	HIST.SURV.	0044-0006-0000		7R	
020711	19-176727	1254 W 87TH ST		WESTMONT	P	1910	HIST.SURV.	0044-0001-0000		7R	
020714	19-176730	1344 W 90TH PL		WESTMONT	P	1922	HIST.SURV.	0044-0004-0000		7R	
083733			JIMTOWN AREA	WHITTIER	U		PROJ.REVW.	HUD901107C	08/18/93	6Y	
097424		10812 1ST ST		WHITTIER	P	1923	PROJ.REVW.	HUD950720A	09/20/95	6Y	
085013		11427 ALLERTON ST		WHITTIER	P	1947	PROJ.REVW.	HUD931105E	12/15/93	6Y	
153922		9479 AMSDELL AVE		WHITTIER		1951	PROJ.REVW.	HUD031101B	12/01/03	6U	
153873		15201 ANACONDA ST		WHITTIER	P	1953	PROJ.REVW.	HUD050428H	04/29/05	6Y	
176016		9118 ARMLEY AVE		WHITTIER	P	1950	PROJ.REVW.	HUD090429B	05/26/09	6Y	
149818		9437 ARMLEY AVE		WHITTIER	P	1950	HIST.RES.	DOE-19-04-0146-0000	07/13/04	6Y	
							PROJ.REVW.	HUD040610K	07/13/04	6Y	
173045		10736 AVONBURY AVE		WHITTIER	P	1953	PROJ.REVW.	HUD080805B	08/13/08	6Y	
140708		9136 BEN HUR AVE		WHITTIER	P	1950	HIST.RES.	DOE-19-03-0181-0000	06/27/03	6Y	

D. Current Photographs

Current Photographs

Figure 17. 661 Roberston Boulevard, View to Northwest (PCR 2014)

Figure 18. 661 Robertson Boulevard, View to West (PCR 2014)

Figure 19. 661 Robertson Boulevard, View to West (PCR 2014)

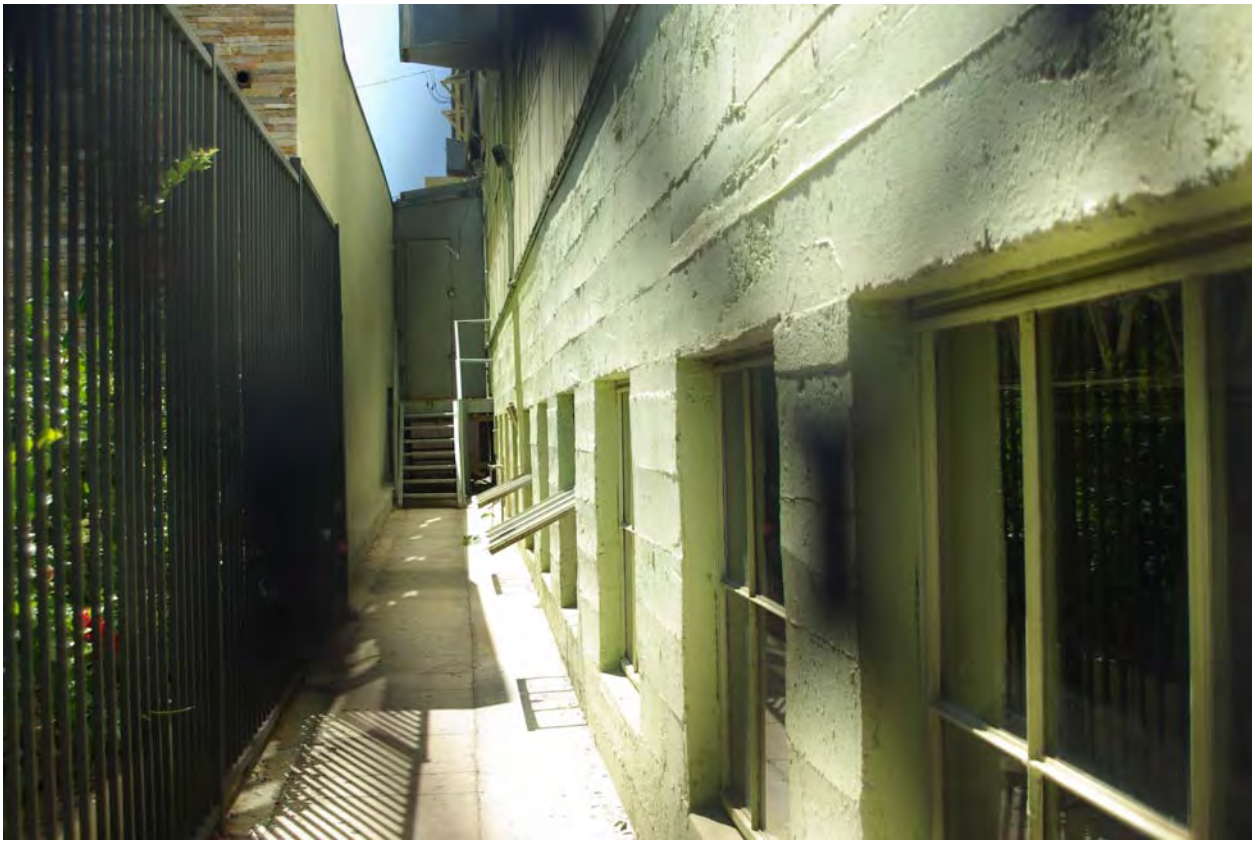

Figure 20. Detail, Raised Basement, 661 Robertson Boulevard, View to West (PCR 2014)

Figure 21. 665 Roberston Boulevard, View to West (PCR 2014)

Figure 22. 665 Robertson Boulevard, North Elevation, View to South (PCR 2014)

Figure 23. 661 and 665 Robertson Boulevard, North Elevation, View to South (PCR 2014)

Figure 24. 661 Robertson Boulevard, North Elevation, View to Southwest (PCR 2014)

Figure 25. Factory, View to East from La Peer (PCR 2014)

Figure 26. Factory, View to East from La Peer (PCR 2014)

Figure 27. Factory Detail, View to East from La Peer (PCR 2014)

Figure 28. Factory Detail, View to Southeast from La Peer (PCR 2014)

Figure 29. Detail, 652 La Peer, View to East (PCR 2014)

Figure 30. Detail, 650-652 La Peer, View to Northeast (PCR 2014)

Figure 31. Detail, West Façade, View to North (PCR 2014)

Figure 32. Detail, 650 N. La Peer, Fitness Factory LA, View to Northeast (PCR 2014)

Figure 33. 650-652 N. La Peer and 661 Robertson, View to Northeast (PCR 2014)

Figure 34. 650-652 N. La Peer and 661 Robertson, View to East (PCR 2014)

Figure 35. Detail, 661 Robertson and Adjacent Structure to South, View to East (PCR 2014)

Figure 36. Streetscape, 652 N. La Peer, View to North (PCR 2014)

Figure 37. Street Frontage, 652 N. La Peer, View to East (PCR 2014)

Figure 38. Street Frontage, 661-665 Robertson , View to North (PCR 2014)

Figure 39. Street Frontage, 661-665 Robertson , View to South (PCR 2014)

E. Professional Qualifications

Margarita J. Wuellner, Ph.D., DIRECTOR OF HISTORIC RESOURCES

Education

- Ph.D., Art History, University of California, Los Angeles, 2005
- M.A., Architectural History, School of Architecture, University of Virginia, Charlottesville, 1991
- Certificate of Historic Preservation, School of Architecture, University of Virginia, Charlottesville, 1991
- B.A., Art History, Oberlin College, Oberlin, Ohio, 1983

Professional Affiliations

- Santa Monica Conservancy
- Los Angeles Conservancy
- California Preservation Foundation
- Society of Architectural Historians
- National Trust for Historic Preservation Leadership Forum
- American Institute of Architects (AIA), National Allied Member
- American Architectural Foundation
- Association for Preservation Technology

Summary

Dr. Wuellner has an extensive background in historic preservation, architectural history, art history and decorative arts, and historical archaeology. Her qualifications and experience meet and exceed the Secretary of the Interior's Professional Qualification Standards in History, Archaeology, and Architectural History. She has 25 years in professional practice in the United States and 15 years of academic experience in American, European and Latin American architecture. She has managed and conducted a wide range of technical studies in support of environmental compliance projects, developed preservation and conservation plans, and implemented preservation treatment projects for public agencies and private clients in California and throughout the United States. Prior to coming to PCR, she was Senior Architectural Historian in EDAW's Los Angeles office (2004-2006); Senior Architectural Historian, Parsons Engineering Science (1995-2004); Architectural Historian, John Milner Associates, Inc., (1991-1995); and Architectural Historian, Land and Community Associates, Charlottesville, Virginia, (1988-1991).

Dr. Wuellner is a specialist in Visual Art and Culture, 19th-20th Century American Architecture, Modern and Contemporary Architecture, Architectural Theory and Criticism, Urbanism and Cultural Landscape. Her academic work has been recognized and supported by numerous scholarships and fellowships including the Samuel H. Kress Foundation Fellowship in Art History; American Council of Learned Societies Fellowship in East European Studies; Edward A. Dickson Graduate Fellowship in Art History, UCLA; and the Thomas Jefferson, Dupont and Governor's State Graduate Fellowships in Architectural History, School of Architecture, University of Virginia. Her accomplishment in historic preservation has been recognized by a 2012 Preservation Design Award from the California Preservation Foundation under the category of Cultural Resources Studies and Reports for the RMS *Queen Mary Conservation Management Plan, Long Beach, California*.

Experience

Rehabilitation/adaptive-reuse, planning and redevelopment projects are of particular interest to Dr. Wuellner. She provides expert assistance to public agencies and private clients in environmental review, from due diligence through planning/design review and permitting; and when necessary, she implements mitigation and preservation treatment measures on behalf of her clients. She is a highly experienced manager with broad national experience throughout the United States in California, Washington, D.C., Virginia, Maryland, Pennsylvania, West Virginia, New York, South Carolina, Georgia, Florida, Texas, Michigan, Ohio, Iowa, Utah, Washington, and Canada. As primary investigator and author of hundreds of technical reports, plan review documents, preservation and conservation plans, HABS/HAER/HALS reports, construction monitoring reports, salvage reports and relocation plans, she is a highly experienced practitioner and expert in addressing historical resources issues while supporting and balancing project goals.

She specializes in the evaluation, management and treatment of historic properties for compliance with Sections 106 and 110 of the National Historic Preservation Act (NHPA), the National Environmental Protection Act (NEPA), Section 4(f) of the Department of Transportation Act, the California Environmental Quality Act (CEQA), and local ordinances and planning requirements. She is highly experienced in the assessment of projects for conformance with the Secretary of the Interior's Standards for the Treatment of Historic Properties, and assists clients with adaptive reuse/rehabilitation projects by providing preservation design and treatment consultation, agency coordination, legally defensible documentation, construction monitoring and conservation treatment.

Dr. Wuellner has over 17 years of project experience in historical resources management and preservation in California and is a regional expert on Southern California architecture. She has prepared a broad range of environmental documentation and conducted preservation projects throughout the Los Angeles metropolitan area as well as in Ventura, Orange, Riverside, San Bernardino and San Diego counties. She currently manages PCR's on-call preservation services contracts with the City of Santa Monica (2002-present), County of San Bernardino Department of Public Works, City of Hermosa Beach, Los Angeles Unified School District and Long Beach Unified School District; and previously managed PCR's preservation consulting services under master agreements with the Los Angeles Redevelopment Agency, City of Long Beach, City of Anaheim, and private developers.

Christian Taylor

260 North Lowena Drive • Long Beach, California 90803
Phone: (760)-401-9334 • E-Mail: cttaylor@usc.edu

Education

Master's Degree in Historic Preservation (M.H.P.). University of Southern California. Los Angeles, California. (Expected Graduation December 2013)

Thesis: *Swiss Born Architect and City Planner, Franz Herding, and His Contributions to The Los Angeles Landscape.*

Bachelor's Degree in History. University of Oklahoma. Norman, Oklahoma (2008)

Experience

Research Consultant, Preservation Arts — June 2013 – Present

As a Researcher and Writer for Preservation Arts, I prepared over four thousand pages of closeout documentation relating to restoration work done on Wilshire Temple and Atascadero City Hall. Reports were based on approved submittals, mock-up reports, requests for information (RFIs), and photo documentation.

Research Consultant, Quaere Inc. — March 2012 – April 2013

While working for Quaere Inc. I researched the backgrounds of people involved in civil litigation proceedings. I also researched businesses and various aspects of real estate properties involved in civil cases. Although my work at Quaere Inc. was not history related, it allowed me to prove my researching skills and gain knowledge about various local and state agencies. In many instances I was able to locate information on hard to find subjects due to my experience in historical research.

Interpretive Specialist, California Department of Parks & Recreation — March 2011 – March 2012

While working as an interpretive specialist for the California Department of Parks and Recreation, I acted as the lead Parks Department representative at Chrystal Cove State Historic Park during phase two of the cottage restoration program. I coordinated with contractors and sub-contractors to insure that Parks Department standards were met throughout the project and that the work met the Secretary of the Interior's Standards for Rehabilitation.

History Intern, California Department of Parks & Recreation — June 2010 – Jan 2011

During my time as an intern for the Parks Department, I worked closely with department historians while organizing thousands of pages of historical documents pertaining to La Purisima State Historic Park. I helped the department assemble a historic landscape report documenting the mission's various structures and their significance in relation to the original restoration work done in the 1930s by the Civilian Conservation Corps.

Presentations

Oklahoma Historical Society, Conference on History — February 2008
Presented: *Mercenaries and Tigers: The Selected Reality of the Press*

Research Projects

Mercenaries and Tigers: The Selected Reality of the Press — November 2007
University of Oklahoma

Googie: Unsavory Design or Tasteless Inspiration? — May 2009
University of Southern California

The Shankland House, 715 West 28th Street: Assessment of Materials and Recommendations for Treatment and Maintenance (Metal) — May 2009
University of Southern California

Manufacturing America: Alexander Hamilton's Efforts to Industrialize the Nation — November 2009
University of Southern California

Sculpting Liberty: Augustus Saint-Gaudens's Standing Lincoln — May 2010
University of Southern California

Mission La Purisima: CCC historic garden and cultural landscape report — January 2011
California Department of Parks And Recreation

Additional Professional Experience

Petty Officer 2nd Class (Naval Aircrew) U.S. Navy — Oct 1996 – April 2007

While serving in the United States Navy I operated SONAR and RADAR equipment as a member of a four person crew onboard the SH-60F Seahawk Helicopter. I also operated as a rescue swimmer and held collateral duties such as Logs and Records Supervisor and Weapons Department Supervisor. My efforts in the military were rewarded with the Navy Commendation Medal, Navy Achievement Medal and multiple Good Conduct Awards among other decorations.

Areas of Interest

Non-Invasive Material Investigation Methods
Rehabilitation and Restoration Project Management
Documentation of Historic Contexts

RITA Y. COFIELD

9601 Pace Ave
Los Angeles, CA 90002
Tel: (213) 479-4039
Email: cofieldrita@gmail.com

CAREER SUMMARY:

- Proficient in preservation research and surveying.
- Computer literate (MS word, MS excel, photoshop, illustrator).
- Familiar with GIS.
- Strong research, writing, and communication skills.
- Invaluable administrative-related experiences.
- Extremely organized and dependable.
- Handle multiple tasks with attention to detail.
- Remain calm in stressful situations.
- Confident working collaboratively as well as independently.
- Committed to creatively serve the public.

RELEVANT EXPERIENCE:

Jan/13 – Apr/13 **Researcher** Hollywood Business Improvement District Los Angeles, CA
×Responsible for gathering occupancy information from municipal documents found on the internet. Organized information into a mapping database used to inform decisions affecting the businesses of Hollywood. Researched and compiled crime data for the Hollywood area.

Jan/12 – Dec/12 **Research Intern** John Friedman Alice Kimm Architects Los Angeles, CA
×Recruited to supervise an extensive historical research of South Los Angeles. Created an image and data bank for major issues related to South L.A., including demographics, literature, industry and history of the Watts Towers. Compiled relevant information on culture, gangs, and articles associated with South LA. Information from findings is invaluable to the firm's goal to revitalize an abandoned industrial section in South L.A.

Jan/11 – Aug/11 **Associate Curator** Watts Village Theater Company Los Angeles, CA
×Built a shared vision with Artistic Director and served as the artistic liaison for the annual production of Meet Me @Metro. Supervised dramaturge, performers and musicians hired for the event. Assisted artists in overcoming challenges and helped to translate their vision into artistically rich performances. Facilitated cooperation and motivated production team to accomplish group goals.

Jun/08 – Dec/10 **Production Coordinator** Jubany NAC/Architecture Los Angeles, CA
×Implemented a more efficient system to track and update all technical information and architectural product samples. Used Photo Shop, Illustrator and CAD to assist design team in producing quality drawings for education and commercial industries. Voluntarily stepped in for unavailable project manager, and completed a measurably high-quality project.

Mar/98 – Jan/08 **Architectural drafter** (Independent Contractor) CA
×Worked collaboratively to complete architectural drawings for renovation and new construction projects. Committed to continual improvement. Helped families increase the value of their homes. Fostered excellent company/client relations while handling complaints and concerns. Stayed until the job was completed and worked long hours with a positive attitude.

RITA Y. COFIELD

9601 Pace Ave
Los Angeles, CA 90002
Tel: (213) 479-4039
Email: cofieldrita@gmail.com

RELEVANT EXPERIENCE CONTINUED:

Oct/97 – ongoing **Prod. Assistant/Stage Manager** (Various theatres) CA

×Inspire and foster commitment and collaboration between actors, designers, and support staff. Make well-informed and timely decisions, even with limited data. Under pressure remain objective, optimistic and persistent in finding solutions. Respond appropriately to needs and feelings of people in different situations. Trusted by all to ensure artistic choices are realized during rehearsals and performances.

EDUCATION:

University of Southern California Los Angeles, CA
Master of Historic Preservation 2011 – Current

Construction & Educational Training Institute El Segundo, CA
Certificate of completion (pre-apprentice) 7/97 – 9/97

Howard University Washington, DC
Bachelor of Architecture & Planning – (Practicing) BArch 1990 – 1996

MEMBERSHIPS:

Historic Theatres Committee *(since '10)* – Participate in committee meetings and rally for saving historic theatres.

Actor's Equity Association *(since '07)* – Participant in activities dealing with the craft of stage managing.

Habitat for Humanity *(since '97)* – Volunteer alongside low-income families to construct and renovate their homes.

ACTIVITIES:

California Preservation Foundation Conference *(2013)* – Round table speaker for "Heritage Conservation or Bust! A Student's View."

REFERENCES:

Trudi Sandmeier
Graduate Director, USC
tsandmeie@usc.edu
(213) 821 – 5452 office

Jackie Maruschak
Theater Colleague
jackmaruschak@yahoo.com
(718) 685 -9300 cell

Marcos Briano
Administrative Coordinator, USC
marcos@usc.edu
(213) 220 – 1107 cell

ESA PCR

201 Santa Monica Boulevard
Suite 500
Santa Monica, CA 90401
310.451.4488 phone
310.451.5279 fax

www.pcrnet.com

memorandum

Date	July 15, 2016
to	State Historical Resources Commission, Office of Historic Preservation
from	Margarita Jerabek, Ph.D., Chris Taylor, M.H.P.
subject	Peer Review - National Register Nomination for the Former Mitchell Camera Factory

ESA PCR has reviewed the National Register Nomination (Nomination) recently submitted to the California Office of Historic Preservation (SHPO) regarding the property located at 648 La Peer and 661 Robertson Lane improved with the former Mitchell Camera Company factory building and former home of Studio One ("Building"). The Nomination does a thorough job covering the details of the Building's occupancy history and identifies the two most significant periods in the Building's chronology, The Mitchell Camera Company (1929-1946) and Studio One (1974-1993). However, the report overwhelms its reader with irrelevant historic context and fails to establish how the Building *significantly* relates to these events. Furthermore, the Nomination overlooks the Building's lack of integrity due to numerous exterior alterations on all of its elevations and the complete remodel of the adjoining office building. The following is a brief review of the Nomination's significance findings and integrity analysis, including ESA PCR's critique of those findings.

National Register Significance Findings

> **Criterion A:** Is associated with events that have made a significant contribution to the broad patterns of our history.[1]
>
> **Criteria Consideration G:** Properties that have achieved significance within the last fifty years.[2]
>
> **The Nomination's Findings:**

Under criterion A, the Nomination found the subject property eligible for its associations with the Mitchell Camera Company and its association with Studio One. In addition to Criterion A, the Nomination claims Studio One is exceptionally important making it eligible under Criteria Consideration G as a property that has attained significance within the last fifty years.

---

[1] "How to Apply the National Register Criteria for Evaluation." National Register Bulletin 15. U.S. Department of Interior, National Park Service, 1990. Revised 1991, 1995, 1997. 12.
[2] Ibid. 41.

The Nomination elaborates on the accomplishments made by the Mitchell Camera Company during the pre-war years when the camera manufacturer occupied the property. The report then states that the factory, being the place where these significant cameras were manufactured, is significant in association with the historic event of camera production and technology used to improve the motion picture industry, specifically the manufacturing of the NC and BNC Cameras, which became a standard bearer for the industry. Therefore, the nomination asserts that the Building should be eligible under National Register Criterion A for its association with the Mitchell Camera Company's contribution to motion picture technology.

The Nomination also found the subject property potentially eligible under criterion A and Criteria Consideration G as an exceptionally important structure associated with LGBTQ history as Studio One, a popular night club that catered to the gay male community. The Nomination states that Studio One was affiliated with significant events relevant to the LGBTQ community such as "Gay Day," started by club owner Scott Forbes, and still practiced at amusement parks throughout Southern California. The Nomination states that Studio One also hosted a number of celebrity cabaret performers and charity events, including fundraisers for AIDS research.

ESA PCR's Response:

In the case of the Mitchell Camera Corporation, ESA PCR agrees that this company's accomplishments were significant to the motion picture industry. What separated the Mitchell Camera Corporation from other camera manufacturers was the technology they developed to reduce the amount of noise produced by the camera's internal mechanism. Mitchell's revolutionary camera movement was first incorporated into the NC model, released in 1932 and then improved upon with the BNC model in 1934. George Mitchell designed the mechanism for the NC model during a period when he was no longer employed by the company and therefore there is no evidence or support to show that the mechanism was invented in the factory building. Furthermore, the utilitarian factory structure did not directly contributed to the development of Mitchell's internal mechanism. Therefore, the factory building cannot be significant in association with the invention of Mitchell's revolutionary mechanism or camera design.

Additionally, the Nomination misleads the reader by claiming that the factory building was specifically designed by the Truscon Steel Company for the Mitchell Camera Company. This was not the case. The Truscon Steel Company's catalog describes the process for which their buildings are designed and constructed. Each project begins with a visit to the project site by a Truscon engineer. The engineer then designs a building, using pre-fabricated Truscon materials, to best meet the needs of the client.[3] While the daylight factory type is suitable for the manufacturing of motion picture cameras, it was a building type used by a wide variety of manufacturers during the early twentieth century. Furthermore, the Building was a common type advertised in Truscon's catalogs, well before the construction of the Mitchell Camera Factory in 1929.[4] The cameras could have been manufactured in any open space, which is evident by the fact that the Mitchell Camera Company relocated to a former automobile factory in 1946.[5]

The Nomination points out the end grain wood flooring as character-defining feature related to the Building's use as a camera factory. End grain wood flooring is not specific to the manufacture of motion picture cameras. End

[3] Truscon Steel Company. "Truscon Permanent Buildings: Standardized for General Industries," 1925 accessed January 26, 2015, https://archive.org/details/TrusconPermanentBuildingsStandardizedForGeneralIndustries, 4.
[4] Ibid. 15.
[5] "Kinner Motor Plant Sold," *Los Angeles Times*, April 6, 1946, A8.

grain wood flooring was used in a variety of industrial applications and is still used today. Furthermore, the end grain wood flooring is the only remaining vestige of industrial use apparent in the building today, all of the machinery has been removed and the interiors have been altered for night club use. As for the Building's association with Studio One, the report fails to adequately state why Studio One is exceptionally significant to national history for eligibility under Criterion A and Criteria Consideration G (properties less than fifty years old). While Studio One hosted celebrity performances and fundraisers, celebrities perform in many venues and fundraisers can be and were held in other places as well. The Nomination claims that Studio One hosted numerous events to raise awareness and money for AIDS research. According to the Nomination, "One of the most famous fundraisers and one of the first major fundraisers was on March 11th, 1984." However, the event was not recognized nationally in major newspapers like the New York Times, nor was it recognized locally in the Los Angeles Times and the Nomination does not provide a citation to support its claim. Furthermore, the event is not recognized in historic timelines presented on contemporary websites related to AIDS awareness such as https://www.aids.gov/ or http://www.avert.org/. Although Studio One was a place associated with the gay community during a time of struggle for equal rights, it was one of many gay friendly businesses, bars, and dance clubs found throughout the nation and the Los Angeles area, specifically West Hollywood's "Boys Town" neighborhood. The Nomination mentions Scott Forbes (Studio One's founder) as the creator of "Gay Day," an event held at amusement parks throughout Southern California. The Gay Day event never occurred at Studio One and therefore is not significantly associated with the former Studio One location.

Despite the extensive historic context provided by the Nomination, ESA PCR's Historic Resources Division does not believe a significant relationship between the Building and the accomplishments of the Mitchell Camera Company or the Gay Rights Movement exists. The Building does not appear eligible under NR Criterion A and Criteria Consideration G. National Register Bulletin 15, *How to Apply the National Register Criteria for Evaluation* specifically states "Mere association with historic events or trends is not enough, in and of itself, to qualify under Criterion A: the property's specific association must be considered important as well."[6] Although the Nomination states that the Building is significant under this criterion for associations with the Mitchell Camera Company's achievements in camera design and LGBTQ History, it fails to establish how the Building significantly contributed to these events. Furthermore, the Nomination fails to make the case for exceptional importance regarding Studio One's place in the history of the LGBTQ Community or the Gay Rights Movement. On pages 58 and 59, the Nomination provides a timeline of important events in the Los Angeles area related to LGBTQ history. The timeline includes sit-ins, gay pride parades, publication of gay newsletters and magazines, and other events and places that significantly contributed to LGBTQ history. The entry for Studio One simply states, "1974: (Scott) Forbes opens Studio One and the Backlot Theatre at The Factory."[7] Historians have recognized the importance of discos and bars as social gathering places where organizations formed to advance the LGTQ Community's pursuit of equal rights. However, nothing in the history of Studio One suggests that it was more important than any other bar, disco, or other social gathering spot within the LGBTQ Community during the 1970s or 1980s. Studio One was not the first club for gay patrons in West Hollywood or greater Los Angeles, nor was it one of the many important bars and gathering places for the Gay Rights Movement that began to formulate in the late 1960s. Therefore, Studio One is not like the Stonewall Inn in New York, which opened in 1967, continues to exist, and was the site of significant events related to the Gay Rights Movement.

---

[6] How to Apply the National Register Criteria for Evaluation, National Register Bulletin 15, 12.
[7] Kate Eggert and Krisy Gosney. "Mitchell Camera Corporation Factory/Studio One Disco-Backlot Theatre." National Register Nomination. 2016. 59.

Integrity Assessment

The National and California Registers have specific language regarding integrity. Both require that a resource retain sufficient integrity to convey its significance.[8] In accordance with the guidelines of the National Register, integrity is evaluated in regard to the retention of location, design, setting, materials, workmanship, feeling, and association. To retain historic integrity, a property will always possess most of the aspects and depending upon its significance, retention of specific aspects of integrity may be paramount for a property to convey its significance. Determining which of these aspects are most important to a particular property requires knowing why, where and when a property is significant. For properties that are considered significant under National Register Criteria A and B, National Register Bulletin 15: How to Apply the National Register Criteria for Evaluation ("National Register Bulletin 15") explains, "a property that is significant for its historic association is eligible if it retains the essential physical features that made up its character or appearance during the period of its association with the important event, historical pattern, or person(s)."[9]

The Nomination's Findings:

The Nomination determined that the former Mitchell Camera Factory/Studio One maintains a high degree of integrity in terms of design, workmanship, materials, location, feeling, and association. The Nomination states that the Building remains in its original location and retains enough original material to maintain its integrity of design, workmanship, and materials, despite the replacement of windows, doors, wall panels, and addition of new doors, stairs, and exterior cladding on the attached former Mitchell Office Building. Furthermore, the Nomination claims the Building maintains the feeling of an industrial property.

ESA PCR's Response:

The Nomination identified the former Mitchell Camera Factory for its associations with the manufacturing and design of Mitchell's innovative motion picture cameras as well as its association with Studio One, LGBTQ history, and the Gay Rights Movement. Therefore, its historic integrity depends on retention of the features necessary to convey the Building's significant associations with these events. Multiple alterations to the exterior elevations of the building have compromised its overall appearance, including the replacement of windows and doors, the addition of new entrances on the primary (east and west) elevations, painted windows, and recladding of the attached office building's exterior (Figures 1-8). In its current condition, the building fails to convey its association with the period in which the Mitchell Camera Company occupied the building (1929-1946). Furthermore, as a utilitarian, pre-fabricated, industrial structure, there are no features associating the structure with the manufacture of motion picture cameras. All of the machinery and equipment that was used to manufacture Mitchell's cameras have been removed and interior spaces have been altered with new corridors and rooms serving a variety of functions, including restrooms and kitchens. Alterations to all of the Building's exterior elevations have resulted in compromised integrity of design, materials, and workmanship. The Building is currently used as a dance club, restaurant, and gym. The alterations that have been made to accommodate its current use have resulted in a loss of feeling. Because the Building is no longer used for industrial purposes and has experienced a series of alternate uses as dance clubs, restaurants, and as a warehouse, it lacks integrity of association. Furthermore, the Building has lost its Studio One signage, awnings, and original entry on the La Peer

[8] How to Apply the National Register Criteria for Evaluation, *National Register Bulletin 15*, 44.
[9] Ibid. 44.

elevation associated with its use as a gay men's dance club. With all of these impacts to its integrity, the property does not appear to meet the high threshold of integrity to be considered for listing on the National Register.

- Alterations to the Robertson Blvd. (east) façade, including the removal of Mitchell Camera Corporation signage, removal of original Truscon windows (replaced with incompatible single-light vinyl windows), the addition of a second-story nightclub entrance, the addition of an exterior staircase, and the construction of a patio area accessed via French doors
- Alterations to the La Peer Drive façade since its period of significance for its association with Studio One nightclub, including the replacement of primary entrance doors, the removal of all Studio One signage and entrance canopy, and the construction of concrete walls that extend from the building's entrance to the sidewalk
- Complete alteration of the factory's 1929 office building, which was an integral component of the daily operations of the Mitchell Camera factory; such that it no longer retains its original appearance or presents any character defining features or Art Deco elements
- Addition of new entries and stairways on each of the building's four façades
- Changes to windows and building materials, including the removal of all original Truscon steel windows on the second story and monitor roof of the building at the eastern segment of the building, and the painting of all exterior materials – including window glazing – which were all originally unpainted
- Extensive changes to the building's interior over decades of multiple tenant changes, such that none of the interior character defining features of the original Studio One discotheque and Backlot Theatre (other than the floor material in some places) still exist, and all interior walls that might have divided the space, bars, and finishes from that period have been removed
- Surrounding setting has been substantially compromised by new infill construction, making the former industrial character of area no longer extant

Figure 1. (Left) West (La Peer Drive) elevation of the former Mitchell Camera Factory, with altered entrance, including new windows and doors, new awning, and block wall partition (PCR 2014)
Figure 2. (Right) West elevation, circa 1969 (Bobby Cole)

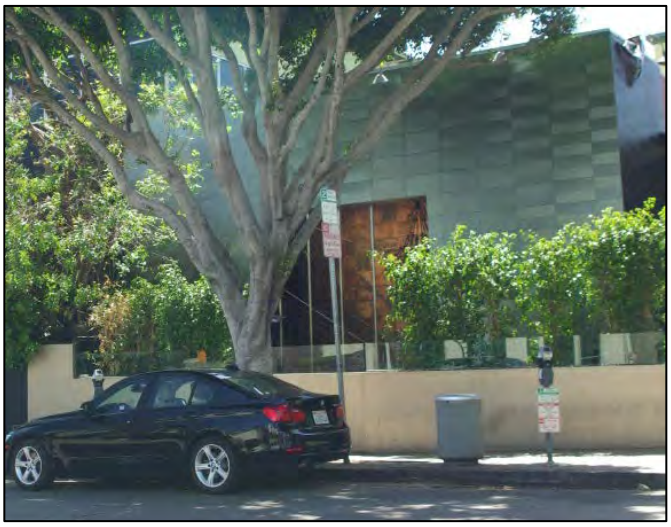

Figure 3. (Left) Office structure, former Mitchel Camera Factory (PCR 2014)
Figure 4. (Right) View of the office building, circa 1929 (American Cinematographer)

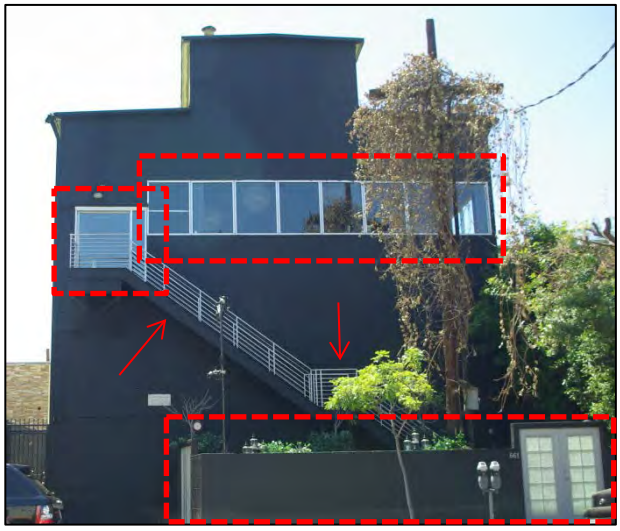

Figure 5. (Left) East (Robinson Boulevard) elevation of the former Mitchel Camera Factory, alterations include new windows, new doorway, new stairs, and a concrete block wall with French doors (PCR 2014)
Figure 6. (Right) East elevation, circa 1929 (American Cinematographer)

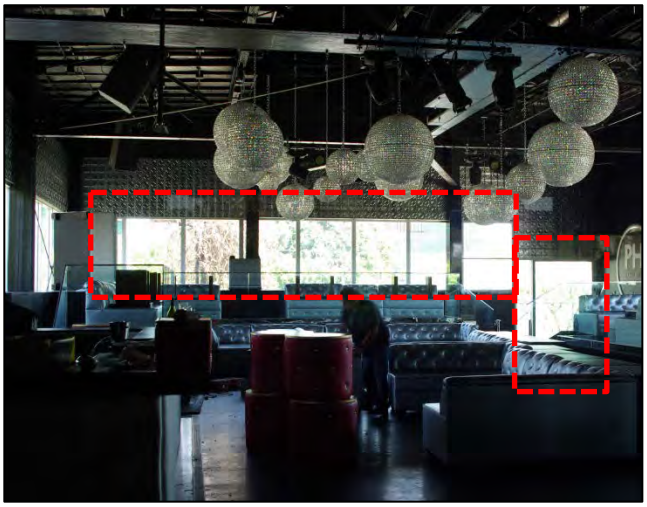

Figure 7. (Left) View of the former Mitchel Camera Factory's interior, with new windows and entry (PCR 2014)
Figure 8. (Right) Interior view of the Mitchell Camera Factory, circa 1929 (International Photographer)

Conclusion

The NR Nomination, prepared by the West Hollywood Heritage Project provides a comprehensive history of the Building from the original date of construction in 1929 to its use as a gay men's disco in the 1980s. The historic context included in the nomination overwhelms the reader with information irrelevant to the discussion of the Building's eligibility and lacks important citations necessary in verifying its claims. Most importantly, the Nomination fails to significantly connect the Building with historic events in national history. Although the Building was the home of the Mitchell Camera Company when it manufactured its revolutionary motion picture cameras, it is the cameras which best represent this historic achievement. The Building played no essential role in the events that lead to Mitchell's development of the NC and BNC cameras.

Additionally, the Nomination claims that the Building played a significant part in the Gay Rights Movement and LGBTQ history. As Studio One, a gay men's dance club owned by Scott Forbes, the Building was a place where gay men could be open about their sexuality. According to the Nomination, Studio One was one of the most famous discos and the site of celebrity performances and fundraising events benefiting AIDS research. While these claims may be true, these types of events were not exclusive to Studio One and do not convey exceptional importance within the overall historic context of LGBTQ History. These events were common at the time, unlike the Stonewall Riots in New York City, which played a significant role mobilizing gay rights groups across the country and bringing the struggle for civil rights into the public sphere. Studio One was not the first dance club of its type and celebrities performances and fundraisers have occurred in many places. The Nomination does not explain why Studio One is exceptionally significant, despite not meeting the fifty-year threshold, to warrant consideration as a national monument above other locations with similar and stronger relationships to LGBTQ history, including locations that were directly involved in the advancement of LGBTQ rights.

Lastly, the Nomination describes significant alterations to all of the Building's elevations, yet claims these alterations have not impacted its integrity. The Nomination claims that the Building retains enough integrity to convey its use as an industrial property but it is not nominating the Building as just an industrial property. The only feature that separated this factory building from other factory buildings like it was the attached Art Deco style office building, which has lost every aspect of its historic appearance. ESA PCR does not agree that the

Building retains a high level of integrity. Due to alterations to the original windows and doors, new door openings, and significant changes to the attached office building, the former Mitchell Camera Company does not convey its historic associations from the 1929-1946 period of significance. Furthermore, the Building lacks integrity from the Studio One period of 1974-1993 due to the removal of signage and awnings associated with the former gay men's dance club.

Based upon our review of the Nomination, the former Mitchell Camera Factory/Studio One does not have a significant association with advancements in motion picture technology or possess exceptional importance with regards to LGBTQ history. Furthermore, the Building lacks the integrity necessary to convey its associations with the Mitchell Camera Factory. ESA PCR stands by its original determination that the Building is not eligible under any of the National Register Criteria for listing.

ESA PCR

201 Santa Monica Boulevard
Suite 500
Santa Monica, CA 90401
310.451.4488 phone
310.451.5279 fax

www.pcmet.com

October 17, 2016

California State Parks
Attn: Office of Historic Preservation
Juliane Polanco, State Historic Preservation Officer
1725 23rd Street, Suite 100
Sacramento, California 95816

Subject: Assessment of National Register Nomination for the Former Mitchell Camera Factory

Dear Ms. Polanco:

As you are aware, ESA PCR represented the owner of the property located at 648 La Peer and 661 Robertson Lane, West Hollywood, California (the "Property"), at the Commission's July 2016 hearing. At that hearing, the Commission denied a nomination requesting that the Commission find the building on this Property eligible for the National Register (the "Original Nomination"). The building on the Property was originally occupied by the former Mitchell Camera Company and subsequently by the former Studio One nightclub ("Building"), so the Commission's denial of the Original Nomination covered the relevant time periods for both former uses.

Since the denial of the Original Nomination in July 2016, the same applicants have revised their nomination to attempt to address the Building's lack of integrity that was identified during the Commission's hearing. The same applicants have reorganized the Original Nomination and provided minor clarifications in an attempt to better establish the Building's integrity and significance either for its association with the Mitchell Camera Company (1929-1946), and/or for its association with Studio One (1974-1993). The nomination with this reorganization and minor revisions has now been set for the Commission's October 2016 hearing (the "Revised Nomination").

ESA PCR has reviewed the Revised Nomination and believes that the applicants have not "substantially revised" the Original Nomination, as required by 36 C.F.R. Section 60.11(f). The Revised Nomination consists primarily of reorganized sections of the Original Nomination, and does not present substantial new information about the Building or its integrity that would alter the Commission's denial from July 2016. Therefore, ESA PCR believes that the Commission should not be considering the Revised Nomination, and that its July 2016 denial should stand.

Nevertheless, since the matter is now set for the Commission's October 2016 hearing, ESA PCR has prepared the following review of the Revised Nomination's significance findings and integrity analysis. Our review and analysis demonstrate that the Revised Nomination should be denied.

I. Summary of Analysis of Revised Nomination

Specifically, the Revised Nomination fails to establish substantial new information in support of National Register significance under Criterion A for the Mitchell Camera Company (1929-1946) or Criterion A and Criteria Consideration G for Studio One (1974-1993) (we note that because the Studio One association does not meet the National Register's 50-year age requirement, the property would have to meet both Criterion A and Criteria Consideration G, "as a property achieving significance within the past 50 years if it is of exceptional importance.") The Revised Nomination also fails to show that the Building retains sufficient integrity to meet the criteria necessary to be eligible for the National Register for either the 1929-1946 or the 1974-1993 time periods. A property must retain the essential physical features that enable it to convey its historic identity to be eligible for the National Register.[1] Here, the overwhelming evidence already presented to the Commission shows that the Building lacks sufficient integrity, and the Revised Nomination does not present substantial evidence to the contrary.

To be considered for listing under Criterion A, the property must be associated with one or more events important in a defined historic context. The Revised Nomination fails to define and develop the associated historic contexts for the Building. Criterion A recognizes properties associated with single events, such as the location where an important invention was developed, or with a pattern of events, repeated activities, or historic trends, such as a building used by an important local social organization. The event or trends, however, must clearly be important within the associated context, moreover, the property must have an important association with the event or historic trends, and it must retain historic integrity.

Although the Revised Nomination does a thorough job covering the details of the Building's occupancy history and identifies the periods in the Building's chronology, the Mitchell Camera Company (1929-1946) and Studio One (1974-1993), the Revised Nomination provides an abundance of irrelevant history and misleading information. In doing so, the Revised Nomination fails to develop clear historic contexts, and does not establish the building's relevance within either the Mitchell Camera Company or Studio One context. Moreover, the Revised Nomination misleads the Commission about the Building's integrity; the extensive, irreversible changes that have occurred to the Building over time has resulted in a structure that no longer evokes a real semblance of either period. There is substantial information, discussed further below, demonstrating that the Building lacks integrity and therefore cannot demonstrate sufficient association with either Mitchell Camera Company or Studio One to be National Register eligible:

- For the Mitchell Camera context, the Building does not retain integrity because primary character defining features have been lost due to the Building's subsequent use as a night club, including the important open concept and natural lighting lost to alterations. The Revised Nomination continues to gloss over the substantial alterations that have occurred to the Building since the 1940s so that it no longer has integrity associated with Mitchell Camera. The Revised Nomination also misleads the Commission about the significance of the Factory's former Art Deco office building – arguing on the one hand that it adds significance to the Factory due to the research and innovation that likely occurred there, while on the other hand claiming it is a "non-contributor" because the office building has completely lost

[1] National Register Bulletin 15, p. 46.

its integrity. The entire original development must be considered as a whole – and the office building has been substantially renovated, removing its Art Deco features, and is not recognizable.

- For the Studio One context, the nightclub signage, distinguishing awnings, and entries are gone, and the building interior has substantially changed, except for some of the hardwood floors and the general building massing. These are not sufficient features to rise to the level of federal eligibility for listing in the National Register of Historic Places.

Finally, the Revised Nomination fails to demonstrate how Studio One and the Building's association with it was of "exceptional importance" justifying a finding under Criterion Consideration G.

For all of these reasons, described in more detail below, we believe the Commission should deny the Revised Nomination.

National Register Significance Findings

Criterion A: Is associated with events that have made a significant contribution to the broad patterns of our history.[2]

Criteria Consideration G: Properties that have achieved significance within the last fifty years.[3]

II. The Mitchell Camera Company

While Mitchell Cameras were important in the entertainment industry – there is no evidence that any camera innovation occurred at the Factory Building. As detailed in PCR Services Corporation's Historic Resources Assessment Report for the Mitchell Camera Factory, dated November 2014 and previously submitted to the Commission, an LA Times article shows that George Mitchell, the inventor of Mitchell Camera innovations, sold his interest in the company in 1929, when the Factory Building was constructed. Mitchell Camera was then owned by Fox Chase during the identified period of significance. After selling his company, George Mitchell went on to innovate at a variety of locations in Los Angeles, including at Technicolor Labs, where he helped design the Technicolor 3-Strip camera in 1934. The Revised Nomination provides no new evidence, and none was discovered through our in-depth research, that the internal mechanism that made Mitchell's NC and BNC cameras so popular in the entertainment industry was developed in the former Factory Building.

Nevertheless, the Revised Nomination claims that the Office Building component that was attached to the larger Factory Building was the location where George Mitchell designed his revolutionary camera movement

[2] "How to Apply the National Register Criteria for Evaluation." National Register Bulletin 15. U.S. Department of Interior, National Park Service, 1990. Revised 1991, 1995, 1997. 12.
[3] Ibid. 41.

responsible for the success of the NC and BNC Cameras.[4] However, the Revised Nomination has provided no historic evidence to support this conclusion. While there is some evidence that the Office Building component may have housed Mitchell's research department[5], the Revised Nomination's claim that the Office Building component was the definitive location where Mitchell developed the innovations for the NC and BNC Cameras is a fatal flaw in the application. This is because the Office Building does not have sufficient integrity to convey any association with Mitchell Cameras, as discussed below in Section IV. The Revised Nomination attempts to gloss over this issue by claiming that the Office Building is a non-contributing element – but that claim presents a complete contradiction. The Revised Nomination cannot have it both ways – the Office Building cannot both be the location where the innovations for the NC and BNC Cameras took place (a significant event in the history of entertainment) AND be a non-contributing element to the overall significance of the Factory Building.

Simply put, the Office Building component of the Factory Building is the only plausible location on the Property where Mitchell could have created the innovations for the NC and BNC Cameras that helped revolutionize the entertainment industry. It therefore must be a contributing element of the overall Factory Building. Since the Office Building is wholly lacking in integrity, as discussed in Section IV below, the overall Building should not be considered eligible for the National Register due to its association with Mitchell Camera.

More specifically, the highly stylized Art Deco Office Building was the public face of the Mitchell Camera Company and was a primary character-defining feature of the property when Mitchell Camera operated at this location during the period of significance (1929-1946). There was a pedestrian connection between the Office Building component and the remainder of the Factory Building at the second level, which is indicated in the Sanborn maps. While the structures were connected, the utilitarian Factory was pushed back away from the street, with the more highly stylized Office Building located prominently at the street front. However, due to substantial later alterations discussed in Section IV, the Office Building has lost its integrity entirely and is no longer recognizable as an office building or as having any significant Art Deco features.

The Factory Building itself is a generic prefabricated industrial structure of the Daylight Factory building type, and presently contains no elements essential to or identifiable with the design, production, or maintenance of motion picture cameras. The Factory Building also has lost substantial integrity due to exterior alterations, such as the removal of original windows and the painting over or replacement of other windows, and numerous tenant improvements that have removed the original factory machinery and substantially altered the interior plan. As a result, the prior features related to the camera factory, such as design, materials, equipment, signage and workmanship, and the relationship of spaces have been so substantially altered that any material evidence of the Building's association with camera manufacturing has been lost.

---

[4] *Mitchell Camera Corporation Factory/Studio One Disco-Backlot Theater Nomination,* National Register of Historic Places Registration form, Prepared by, West Hollywood Heritage Project, August 12, 2016, p. 15.
[5] "The Mitchell's New Home, *American Cinematographer,* February 1929.

Therefore, as it stands today, the factory component of the Building is recognizable as only the remnant of a Daylight Factory building type that has lost its Office Building – a component that was critical in the original special relationships of the Building during the period of significance (1929-1946). Finally, no material evidence showing any association with the Mitchell Camera Company or the manufacturing of movie cameras remains at the property today.

III. Studio One

While the Revised Nomination provides a lot of irrelevant background information on activities and individuals who frequented Studio One, it does not adequately develop a historic context for Studio One or document a specific event or significant trends that are clearly important within the associated context. Moreover, the Revised Nomination is fatally flawed because it does not demonstrate that the Building had an important association with a significant event or historic trend.

Studio One was one of many local venues in the West Hollywood area where Gays were welcome during the period identified for Studio One (1974-1993). The Revised Nomination provides no new evidence to demonstrate that Studio One had any exceptional significance in furthering accessibility to or development of Gay entertainment venues or Gay rights. In fact, Studio One employed exclusionary policies catering to white Gay males, and it is documented that there were public demonstrations outside Studio One against these exclusionary policies.

> White men did not have to show age/photo ID if doormen knew them and one piece if he didn't, a driver's license sufficing. African-American men had to show two pieces of age/photo ID, a driver's license alone was insufficient. When gay black men quickly got hip to the racist jive going on, they would show up prepared with two pieces of age/photo ID. On the spot, they were then suddenly required to show three pieces of required age/photo ID, an almost impossible task for any of us. The ID scam was also used on women. In addition, they were barred on the spot by what they were wearing, like suddenly open-toe shoes were prohibited, too short shorts not allowed, long-sleeve blouses forbidden, and so the unwinnable sexist charade would continue.[6]

This evidence patently contradicts the Revised Nomination's misleading and inaccurate claim of exceptional significance for Studio One for furthering the cause of LGBTQ rights. The phrase "exceptional importance" under Criterion G may be applied to the extraordinary importance of an event or trend in history. Properties listed in the National Register which have attained significance in less than fifty years include, for example, the launch pad at Cape Canaveral from which men first traveled to the moon, or the home of nationally prominent playwright Eugene O'Neill. The phrase "exceptional importance" does not require that the property be of national significance. It is a measure of a property's importance within the appropriate historic context, whether the scale of that context is local, State, or national. A property that has achieved significance within the past fifty years can

[6] Don Kilhefner, *Jim Crow Visits West Hollywood: Studio One and Gay Liberation*, (http://www.wehoville.com/2016/08/05/jim-crow-visits-west-hollywood-studio-one-gay-liberation/), August 5, 2016.

be evaluated only when sufficient historical perspective exists to determine that the property is exceptionally important.

Here, the record is clear that there were numerous establishments in West Hollywood that existed before and during the time when Studio One operated where Gays could be themselves, such as The Farm, Mother Lode, Revolver Video Bar, and the Blue Parrot. There is no evidence that those establishments operated with exclusionary policies like Studio One. The fact that Studio One discriminated against minorities and other members of the LGBTQ community has not been demonstrated to be, in and of itself, an event of "extraordinary importance" in LGBTQ history. On the contrary, places like The Farm, located at 7974 Santa Monica Boulevard in West Hollywood played significant roles in the advancement of gay rights. According to gay rights advocate Don Kilhefner, The Farm was the site of a planned "Touch-In" in September of 1970. Members of the Gay Liberation Front (GLF) gathered at the popular gay bar to protest the anti-touching laws. "At 10 p.m. on a Friday night (Sept.18, 1970), other GLFers and I, strategically placed around the packed bar, started shouting, 'Reach out and touch your gay brother, show him affection, and don't budge no matter what happens. If they arrest one of us, we all go to jail.'"[7]

As a result, the Revised Nomination does not provide the perspective necessary to find that Studio One was exceptionally significant in the local history of LGBTQ rights, and that the Factory Building still conveys its association with Studio One. The Revised Nomination evaluation of Studio One is based on conjecture and fails to provide substantial evidence established through scholarly research and evaluation.

IV. Integrity

The Revised Nomination's analysis of integrity fails to identify those features which convey the Building's significant associations with each of the two periods of significance, and glosses over substantial alterations to both the Factory and the connected Office Building after Mitchell Camera Company left the Property in the mid-1940s. The Revised Nomination's most glaring error is its dismissal of the completely remodeled Office Building as a non-contributor. This portion of the Building not only housed the company's offices but is also said to have been the location of Mitchell's research facilities. If the Factory Building is significantly associated with the advancements the Mitchell Camera Company made to the motion picture industry, then the portion of the Building where any research and development occurred should be considered a primary character defining feature. As a result, the Office Building's integrity is critical to the site's ability to convey its significance. The Revised Nomination misleadingly ignores the Office Building's integrity. As detailed in PCR Services Corporation's Historic Resources Assessment Report for the Mitchell Camera Factory, dated November 2014, the Office Building has been completely renovated so that it is no longer recognizable. The Office Building lacks integrity to convey any significant association with the Mitchell Camera Company (See Attachment A, pages 1-11 for photographs of the Office Building's existing conditions).

[7] Ibid.

The Revised Nomination also confuses the integrity discussion and attempts to combine the Mitchell Camera Factory and Studio One integrity discussions into a single analysis, when they actually must be analyzed under two separate analyses because there are two separate time periods at issue: Mitchell Camera Company (1929-1946) and Studio One (1974-1993). The seven categories of Integrity determine a building's or sites' ability to convey its significance. Therefore, character defining features related to the building's contributions to history during the Mitchell Camera Company period of significance and the Studio One period of significance should be described and their conditions assessed to determine if the Building continues to convey its historical associations.

Instead, the Revised Nomination simply acknowledges the fact that the Building has encountered multiple alterations due to the variety of uses throughout its history, and summarily dismisses them because the Building still looks somewhat like a "factory." The Building is not being nominated as a good example of a general factory building; therefore that is not the relevant inquiry. The Revised Nomination claims that the Building is significant under the Mitchell Camera Company's period of significance due to the numerous contributions to the advancement of film technology made by the Mitchell Camera Company during that time. *National Register Bulletin 15: How to Apply the National Register Criteria for Evaluation* states that "Integrity is the ability of a property to convey its significance." In this case, it is not enough for the Building to still look like a factory.

For Mitchell Camera Company (1929-1946), the relevant inquiry is whether the Building still looks like the factory building that contributed significantly to the advancement of motion picture technology. The wholesale enclosure of the daylight factory's large industrial style windows, which have either been replaced, painted over and blocked by new interior walls, is a significant impact to the Building's integrity (See Attachment A, pages 20-27 and 42-46 for photographs of the Building's interior existing conditions). As noted in the Revised Nomination, the Daylight factory type was specifically selected by the Mitchell Camera Company for its abundance of natural light to aid the factory workers in the production of its cameras. The windows should be considered a primary character defining feature and their alteration has resulted in a degradation of the Building's integrity.

The Revised Nomination also ignores that the former wide open interiors that were critical for the Building to function as an industrial factory have been altered with new walls, the addition of bars, and other spaces for many of the intervening uses that have occurred since 1946 (See Attachment A, for photographs of the Building's existing conditions throughout the interior spaces). The once open spaces were essential to Mitchell Camera's operation and therefore, their alteration is a significant impact to the Building's integrity. In addition, the completely altered Office Building attached to the factory housed Mitchell Camera's offices and research facilities. To the extent that any of Mitchell's advancements in film technology occurred on the Property, they would have been developed in this portion of the site. Furthermore, the office spaces are where Mitchell's advancements would have been sold to the motion picture industry. However, the Revised Nomination dismisses the Office Building as a non-contributing element because it conflicts with its conclusion that the rest of the factory has a high level of integrity.

For Studio One (1974-1993), substantial alterations have occurred since Studio One left the Building that are not addressed in the Revised Nomination. In its current condition, the Building does not convey any significant associations with Studio One and there is no physical or material indication that Studio One was ever located in the Building. The exterior primary entrances on La Peer and Robertson have been altered and do not appear as they did during the Studio One period. Furthermore, the nightclub interiors have been substantially altered to accommodate the new modern dance club and gym occupying the spaces and do not retain any physical or material evidence to indicate Studio One ever was located in the building (See Attachment A, pages 12-14 for photographs of the Building's Robinson Boulevard façade and pages 34-38 for photographs of the Building's La Peer Drive façade).

In summary, while the Revised Nomination acknowledges certain integrity problems with the Building, it none-the-less characterizes any Building element that has lost its integrity as "non-contributing". The Revised Nomination also incorrectly confounds elements and confuses the concept of integrity. *Integrity* has a specific application for the National Register criteria, and most of the Building's contributing elements and integrity associated with either the Mitchell Camera Factory or Studio One would be different under those critera because different aspects of the building were important for those two distinct uses. The Building itself MUST continue to convey its significance – the essential physical features that made up its character or appearance during the period of its association with the important event, historical pattern or person[8] - and it does not. The Revised Nomination does not provide substantial new or different information related to integrity beyond what was found not to satisfy National Register eligibility criteria by the Commission in July 2016. Nothing has changed, and the Building can only be eligible if it meets National Register criteria based on its existing integrity. As discussed herein, the Building does not meet that threshold.

V. Incorporation of Prior Submittals

As discussed above, ESA PCR believes the Revised Nomination is substantially the same as the Original Nomination, and therefore the record of prior submittals to the Commission concerning the Factory Building should apply to the Revised Nomination. For clarity purposes, ESA PCR hereby incorporates by reference the following documents that were submitted into the record for the Original Nomination into this response:

- PCR Services Corporation's Historic Resources Assessment Report for the Mitchell Camera Factory, dated November 2014
- Letter from Nathan Goller to State Historic Preservation Officer, dated June 14, 2016
- ESA PCR Peer Review – National Register Nomination for the Former Mitchell Camera Factory, dated July 15, 2016

[8] Natinal Register Bulletin 15, p. 46.

VI. Conclusions

After careful review of the Revised Nomination, it is our conclusion that the authors have failed to bring new information into the analysis and have only provided addition irrelevant information which is confusing and misleading. The Revised Nomination claims that the Building is significant for its association with the Mitchell Camera Company and its contributions to the development of motion picture technology. However, the Revised Nomination contradicts itself by claiming that the attached Office Building is a non-contributor, completely ignoring the fact that the Office Building also held Mitchell's research department where any innovations concerning the advancement of motion picture technology would have occurred on the Property. Therefore:

- **The Office Building should be considered a contributor to the overall resource, and because the Office Building has been significantly altered over time and retains no integrity to convey its historical association with Mitchell Camera Company, the overall Building does not have sufficient integrity to be eligible for the National Register**.

Additionally, the Revised Nomination claims that the Building was specially designed for Mitchell's operation to include the important daylight factory design. However, the integrity analysis provided does not address the alterations to the former daylight factory's character defining features, which include the multiple factory windows found on all levels of the Building. Nearly all of the original windows have either been replaced, painted over or obscured by new interior walls. Therefore:

- **In its current condition, the Factory Building lacks integrity and does not convey any significant associations with the historic context significantly associated with the Mitchell Camera Company. As a result, the Building does not appear eligible for National Register listing under criteria A for any associations related to the Mitchell Camera Company.**

Furthermore, the Revised Nomination continues to claim that the Building's occupancy by Scott Forbes and Studio One warrants special consideration under Criteria Consideration G and Criteria A because of its association to the advancement of LGBTQ rights. The Revised Nomination describes events and celebrity sightings at Studio One, none of which appear to be significant to the advancement of LGBTQ rights. While Studio One was built at a time when gays were on the brink of collective activism, some rights activists would distance themselves from the popular nightclub because of the party atmosphere and the stereotypes that plagued it. The club had a reputation for racial and gender discrimination, limiting access solely to white gay males. The club's exclusionary reputation stands in stark contrast to other venues in West Hollywood that long existed at the time where gays could congregate openly and be themselves. Therefore:

- **The Building and its association with Studio One is not of "exceptional importance" in the history of LGBTQ rights or entertainment and as a result does not qualify under Criterion Consideration G.**

In addition to lacking exceptional importance, the former location of Studio One lacks integrity to convey its association with once popular dance club. The primary entrances to the club have all been altered since Studio One closed its doors. In its present condition, there is no indication that Studio One once occupied the space. Interiors have all been remodeled to accommodate new modern dance clubs. The Revised Nomination does not provide evidence to demonstrate that the Building retains integrity as it relates to Studio One. Therefore:

- **Based on a lack of significance and integrity, the Building is not eligible for listing on the National Register under Criteria A for its association with Studio One.**

We appreciate the Commission's consideration of our comments, and look forward to presenting at the Commission's October 28, 2016 hearing.

Sincerely,
ESA PCR

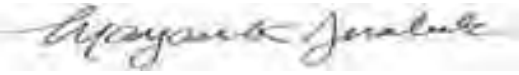

Dr. Margarita C. Jerabek
Director of Historic Resources

LIST OF ATTACHMENTS
Attachment A: Existing Conditions Photographs

East elevation of former Mitchell Camera Company Office Building, View to the west

Exterior view of the east elevation of the Mitchell Camera Company office building, view to the southwest

Exterior view of the east elevation of the Mitchell Camera Company office building, view to the northwest

Exterior view of the north elevation of the Mitchell Camera Company office building, view to the west

Exterior view of the north elevation of the Mitchell Camera Company office building, view to the south

Interior of the forer office and research building, view to the west

Interior of the forer office and research building, view to the east

Interior of the forer office and research building, view to the east

Interior of the forer office and research building, view to the north

Interior of the forer office and research building, view to the west

Interior of the forer office and research building, view to the west

Overview of the altered east elevation (Robinson Boulevard) including new block wall, new stairs, new windows and window openings, new door and door opening, View to the west

New staircase leading to the new door opening cut into the east elevation, view to the southwest

New staircase, windows, and window openings on the Building's east elevation, view to the west

New windows and altered window openings along north elevation, view to the southeast

View of new mechanical and ventilation equipment on the roof and north elevation of the factory and attached office building, view to the southeast

New exterior door with new metal staircase on north elevation, view to the southwest

New interior hallways on the Building's 2nd floor, view to the south

New interior hallways on the Building's 2nd floor, view to the east

View of the Building's 2nd floor interior, view to the west

View of the Building's 2nd floor interior, view to the south

View of the Building's 2nd floor interior, view to the west

Alterations to the Truscon structural system to accomodate new lighting, audio equipment, and decor

Alterations to the Truscon structural system to accomodate new lighting, audio equipment, and decor

Interior view of the Building's second floor with new walls covering the factory's windows, view to the north

Altered interior space at the west end of the Building's 2nd floor, view to the east

Altered ceiling pannels at the west end of the Building's second floor, view to the west

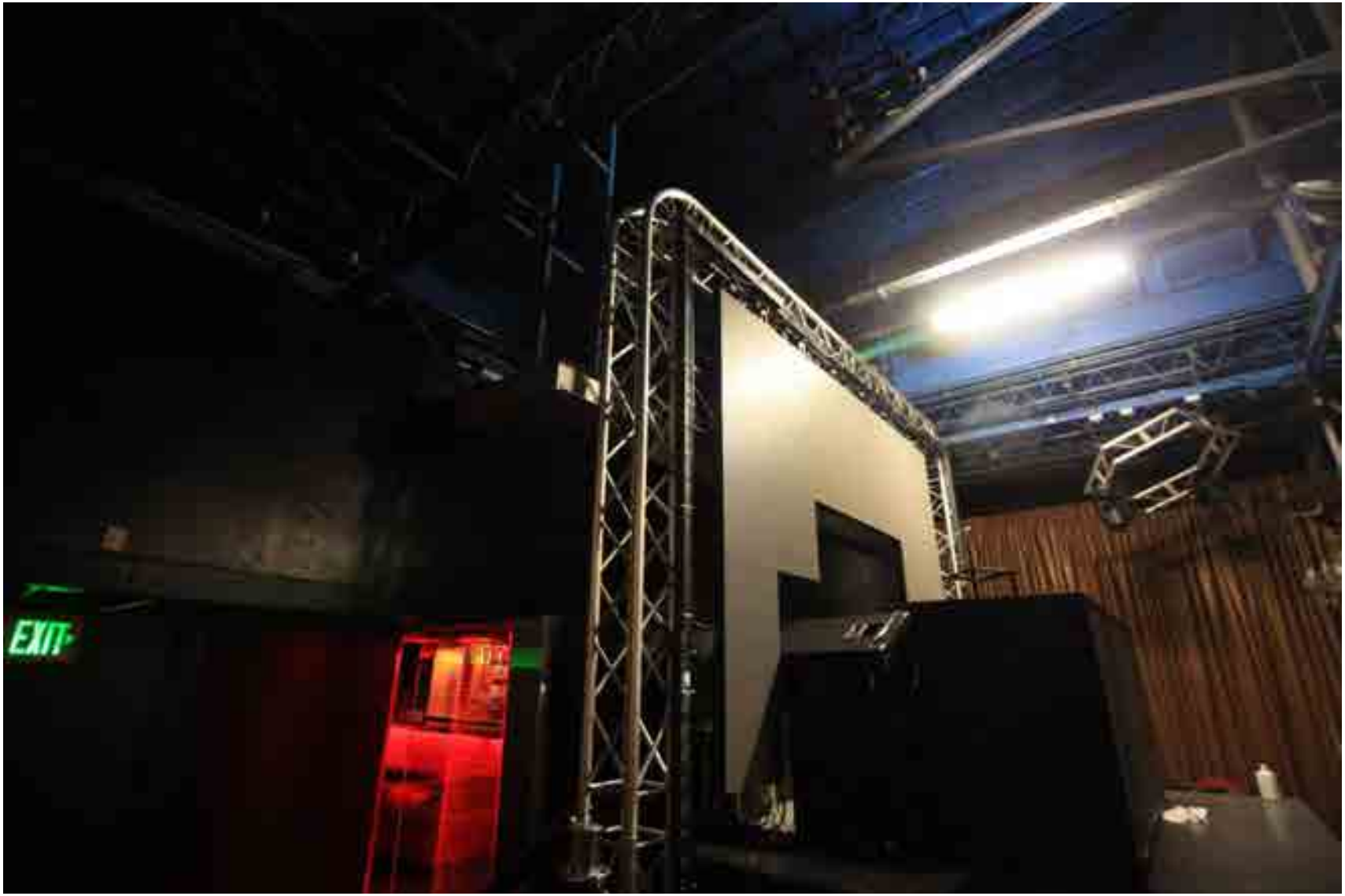

New stage structure on the Building's 2nd floor, view to the northwest

Detail view of the new stage on the second floor of the Building, view to the south

Altered freight elevator, view to the west

Stairs leading to second floor of the Building from west enetrance, view to the west

the factory building's former freight elevator, view to the west

Interior of the west elevation entrance, view to the southeast

View of the altered entry on west elevation, view to the east

View of the altered entry on west elevation, view to the east

View of the altered entry on west elevation, view to the east

Concrete planter obstructing use of the former freight elevator, view to the east

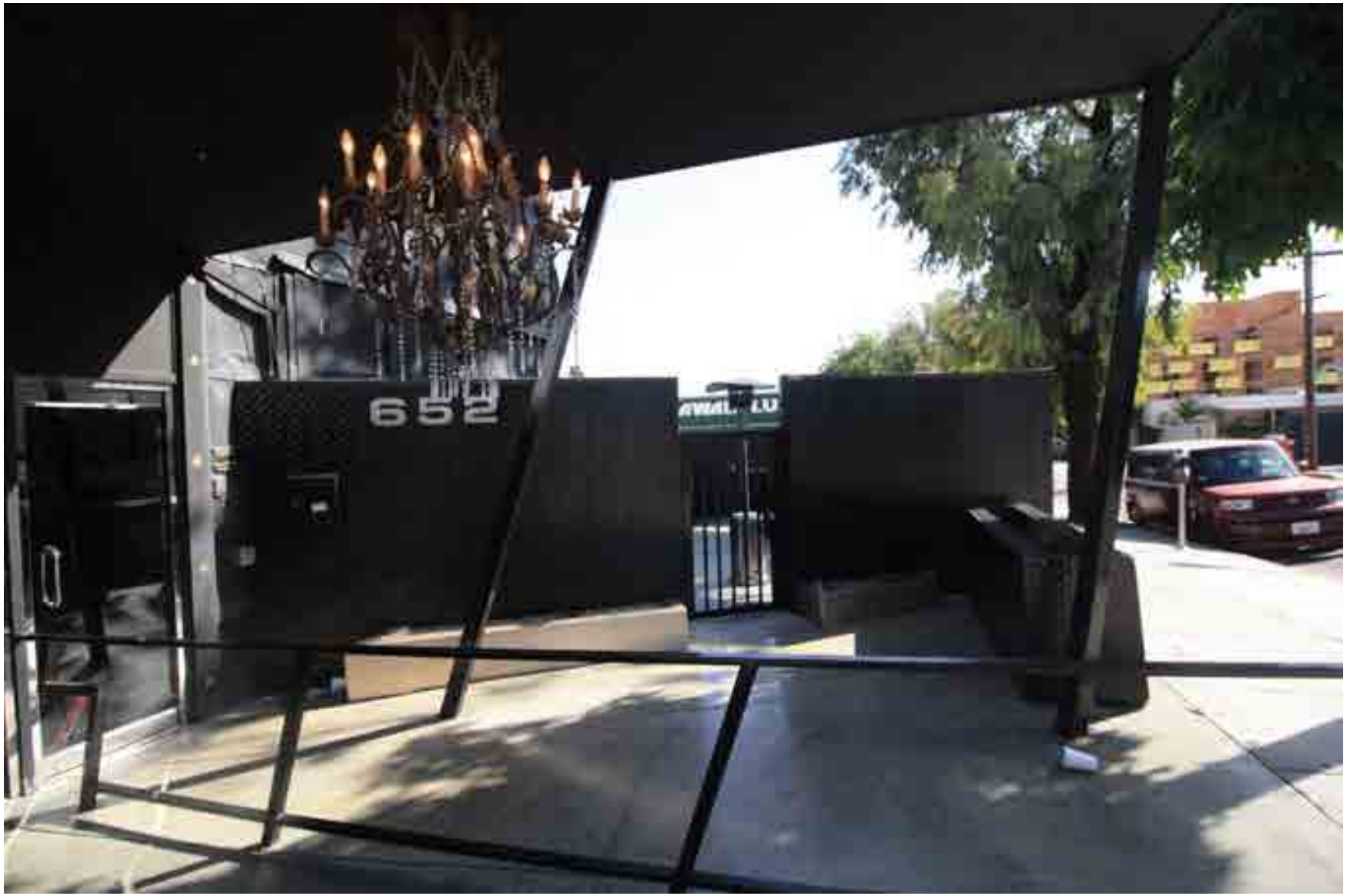

New wall and canopy on the west elevation, view to the south

Overview of the Building's south elevation including new ventilation equipment on the roof, painted and replaced windows, replaced wall pannels, and new door openings, view to the north

View of the southwest corner of the building showing some of the replaced pannels, view to the northwest

New metal rollup door and new pedestrian entry, view to the northeast

New lighting attached to original Truscon framework, view to the southwest

New interior concrete block walls on the first floor of the Mitchell Camera Factory Building, view to the northwest

New electrical conduits, lighting, ceiling fans attached to interior trusses, new ventilation ducts, view to the north

New interior walls on the first floor of the Mitchell Camera Factory Building, view to the north

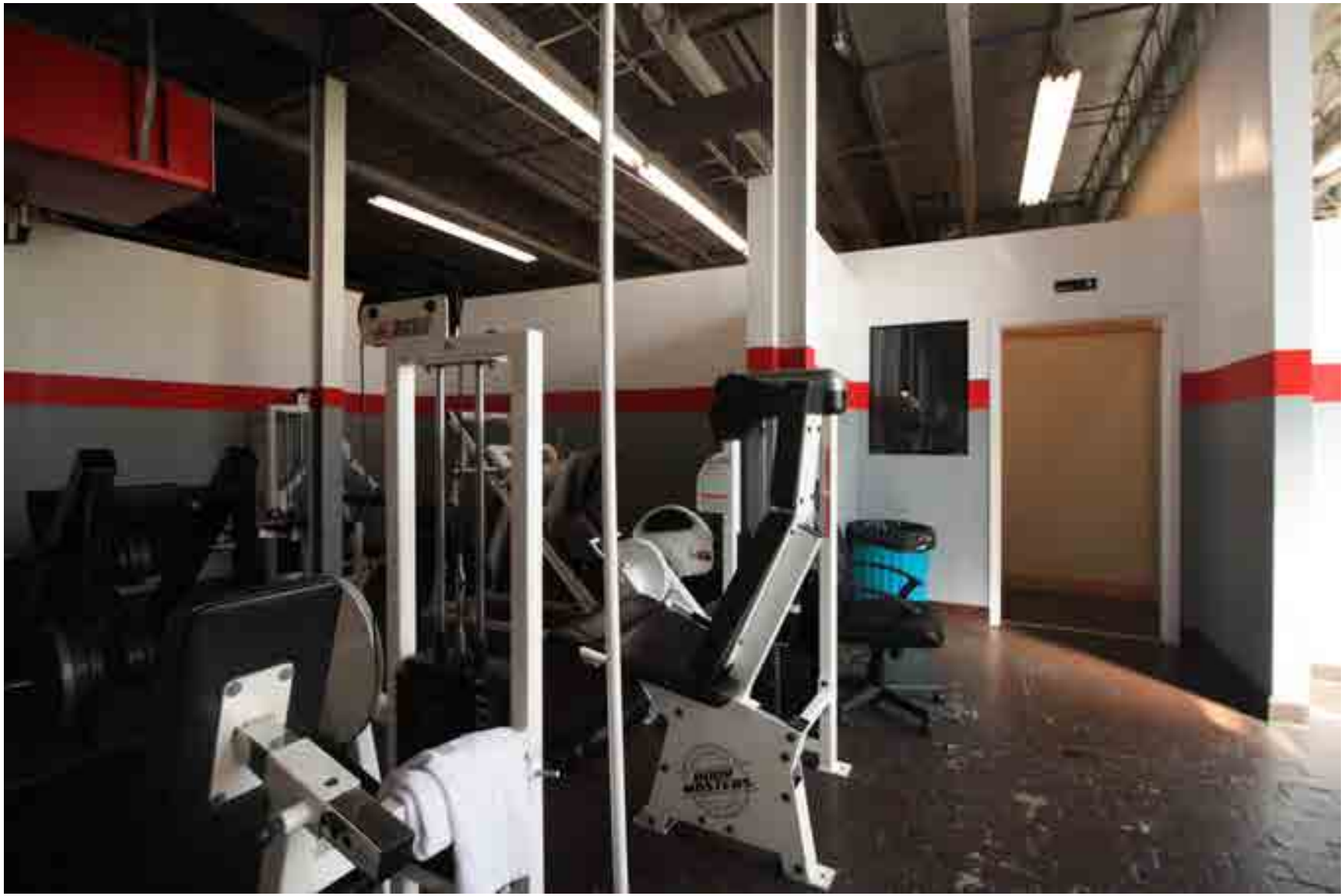

New interior walls on the first floor of the Mitchell Camera Factory Building, view to the east

Nathan Goller

655 North Robertson Blvd.
West Hollywood, CA 90069

Telephone (310) 289-4806
Telefax (310) 289-6870
Email: nate@phyllismorris.com

June 14, 2016

State Historic Preservation Officer
Office of Historic Preservation
1725 23rd Street, Suite 100
Sacramento, CA 95816-7100

State Historical Resources Commission
P.O. Box 942896
Sacramento, CA 94296-0001

Re: Opposition to Nomination of Mitchell Camera Corporation Factory to National Register of Historic Places

Dear Sir or Madam:

I represent the ownership of the Factory Building located at 661-665 Robertson Boulevard and 648-652 North La Peer Drive in West Hollywood, California (Property). I certify that I am the General Partner of Robertson Court, a California General Partnership, which holds 90 percent ownership of the Property. I am sending this notarized letter to formally object to the pending nomination of the Property to the National Register of Historic Places.

The pending nomination prepared and submitted by Kate Eggert and Krisy Gosney of the West Hollywood Heritage Project (an organization unaffiliated with the Property) is inaccurate, misleading, and incorrect in many respects. For a variety of reasons, the Factory Building is not eligible for listing on the National Register. Most importantly, the Factory Building lacks integrity, which I understand is essential for National Register eligibility. The pending nomination virtually ignores the issue of integrity and fails to acknowledge the numerous changes that have occurred on and around the Property over many decades that demonstrate the building's lack of integrity. In addition, the pending nomination incorrectly characterizes the significance of the Factory Building's previous association with the Mitchell Camera Corporation, and does not follow the appropriate National Register standards when discussing the Factory Building's use as an LGBT-friendly club in recent decades. By misleading the reader and mis-applying the National Register standards, the pending nomination should not be considered credible by your office.

I have attached for your review a *Historic Resources Assessment Report* regarding the Property prepared by PCR Services Corp. of Santa Monica. This Historic Report was prepared by Dr. Margarita J. Wuellner, a nationally recognized and experienced architectural historian and historic preservation expert. It both fairly and accurately describes the history of the Property and evaluates the Factory Building under applicable historic resources laws. The Historic Report concludes that the Factory Building is not eligible for listing under any federal, state or local eligibility criteria. I urge you to read the Historic Report carefully as you consider the pending nomination. In comparing the two documents, you will see that the pending nomination contains numerous flaws and does not accurately represent the Factory Building's history or its present condition.

Below I have provided additional detail on the points I have raised above in opposition to the pending nomination. I respectfully request that you take these points into consideration and reject the pending nomination of the Factory Building to the National Register.

A. The pending nomination is misleading and inaccurate on the issue of integrity.

As explained in the Historic Report, a resource is only eligible for listing on the National Register if it meets the criteria for evaluation as set forth in National Park Service guidelines and if it has "integrity." There are seven aspects or qualities that define integrity: location, design, setting, materials, workmanship, feeling, and association. In essence, in order to be eligible for listing, the resource must retain "the essential physical features that enable it to convey its historic identity." (Historic Report, pp. 5-6.) Therefore, a resource must retain physical characteristics that existed during its period of significance in order for the authenticity of the resource's physical identity to be preserved.

The Historic Report contains a comprehensive account of the Property and its historic context, as well as an evaluation of the Factory Building. Dr. Wuellner concludes in the Historic Report that the "property exhibits a low level of integrity." This conclusion is correct because of several factors:

- Alterations to the Robertson Blvd. (east) façade, including the removal of Mitchell Camera Corporation signage, removal of original Truscon windows (replaced with incompatible single-light vinyl windows), the addition of a second-story nightclub entrance, the addition of an exterior staircase, and the construction of a patio area accessed via French doors;

- Alterations to the La Peer Drive façade since its period of significance for its association with Studio One nightclub, including the replacement of primary entrance doors, the removal of all Studio One signage and entrance canopy, and the construction of concrete walls that extend from the building's entrance to the sidewalk;

- Complete alteration of the factory's 1929 office building, which was an integral component of the daily operations of the Mitchell Camera factory, such that it no longer retains its original appearance or presents any character defining features or Art Deco elements;

- Addition of new entries and stairways on each of the building's four façades;

- Changes to windows and building materials, including the removal of all original Truscon steel windows on the second story and monitor roof of the building at the eastern segment of the building, and the painting of all exterior materials – including window glazing – which were all originally unpainted;

- Extensive changes to the building's interior over decades of multiple tenant changes, such that none of the interior character defining features of the original Studio One discotheque and Backlot Theatre (other than the floor material in some places) still exist, and all interior walls that might have divided the space, bars, and finishes from that period have been removed; and

- Surrounding setting has been substantially compromised by new infill construction, making the former industrial character of area no longer extant.

In combination, these factors mean that the "original historic building fabric has already been lost." In particular, while the Factory Building may be associated with West Hollywood's industrial history, extensive physical alterations to the exterior of the building and its interior features have degraded and substantially changed the building's physical characteristics since the industrial period. What remains is a building that does not resemble its industrial past.

Quite appropriately, Dr. Wuellner concludes that the Factory Building does not "meet the high threshold of integrity to be considered for listing on the National Register, California Register, or designation as a West Hollywood Cultural Resource." (Historic Report, pp. 34-35.)

The pending nomination includes only a brief discussion of integrity, which acknowledges that the "building has lost some integrity of materials." (Nomination, Section 7, page 10.) However, a National Register listing cannot be based on such limited detail and the absence of thorough analysis – particularly in light of the evidence in Dr. Wuellner's report that reaches the **opposite** conclusion.

In sum, the pending nomination is severely flawed because it fails to accurately describe or analyze the changes that have occurred to the Factory Building, and it is wholly lacking in discussion of major alterations to the Factory Building's facades, addition of new entries and stairways, and changes to windows and building materials. It also ignores that the neighborhood surrounding the Property has been forever altered by new infill construction, obliterating the former industrial character of the neighborhood. Instead, the pending nomination summarily concludes that the Factory Building's integrity is intact without any evidentiary support. Such a conclusion, in the absence of any evidence or analysis, is simply not supportable.

Therefore, the pending nomination is inaccurate and misleading as drafted. I urge you to read the Historic Report for a comprehensive analysis of the erosion of the Factory Building's integrity. Without the requisite level of integrity, the Factory Building is not eligible for listing on the National Register. Our experts will be providing you with additional information on these issues in advance of the July 29th State Historic Resources Commission meeting.

B. The Mitchell Camera Factory was not historically significant.

The pending nomination argues that the Factory Building satisfies Criterion A of the National Register criteria. Criterion A is that the property "is associated with events that have made a significant contribution to the broad patterns of our history." (Historic Report, p. 5.) The pending nomination argues that this criterion is satisfied by the Factory Building because Mitchell motion picture cameras were manufactured at the Factory between 1929-1946, and because Mitchell motion picture cameras were important in the Los Angeles motion picture industry.

However, the Historic Report undertakes a much more thorough analysis of the work that occurred in the Factory Building during the time when it was owned by the Mitchell Camera Corporation, and based on this detailed analysis it comes to the opposite conclusion:

> "Although the factory building was constructed in 1929 for the production of Mitchell Cameras, the building contributed little to the development of Mitchell Camera Technology. The Mitchell Camera Corporation's most important contributions to the advancement of camera design occurred outside the factory during the identified period of significance. George Mitchell designed the mechanism for the NC and BNC cameras after he left the company in 1927 and before returning in 1934. In 1934, George Mitchell helped design the Technicolor Three-Strip Camera in Technicolor's Laboratory. The building itself is a generic prefabricated industrial structure and contains no elements essential to the design, production, or maintenance of motion picture cameras." (Historic Report, pp. 35-36.)

Therefore, while the Mitchell motion picture cameras were indeed manufactured at the Factory Building between 1929-1946, there is nothing historically significant about the building itself as it relates to the cameras or the motion picture industry. There is no evidence provided in the pending nomination whatsoever that any significant innovations related to motion picture cameras occurred in the Factory Building, or that it served any other purpose besides a generic manufacturing facility. In the absence of such evidence, the Factory Building does not qualify as being associated with events that "made a significant contribution to the broad patterns of our history." The pending nomination's conclusion that the Factory Building satisfies Criterion A is therefore deeply flawed, and should be rejected based on the far more thorough analysis of this issue as provided in the Historic Report.

C. The Factory's role in LGBT history does not satisfy National Register criteria.

The pending nomination argues that the Factory Building also satisfies Criterion A because of its use as Studio One, an LGBT-friendly discotheque and the site of some AIDS fundraisers. This period of the Property's history began in 1974, when the Studio One nightclub opened. While the Property is older than the 50-year threshold required to satisfy Criterion A according to the National Register criteria, its use as Studio One does not meet this threshold, as

Studio One opened only 42 years ago and continued operations in the building until little more than 20 years ago.

As explained in detail in the Historic Report, resources of potential significance which are less than 50 years old may still satisfy the National Register criteria if, under Criterion Consideration G, their "exceptional contribution" to the development of American history, architecture, archeology, engineering and culture can be demonstrated. However, the Factory Building does not satisfy Consideration G for several reasons. Primarily, while the Factory Building contained Studio One, a large dance club and a place where gay people gathered in the 1970s and '80s, it was not important for political activism or advancing the cause of gay rights. In fact, Studio One was well-known as an "exclusive" and exclusionary club that was not welcoming to women, African Americans or Latinos. In addition, no famous people in the gay rights movement are associated with either Studio One or the Factory Building. While the Factory Building was certainly a place where gay people gathered in West Hollywood, it was not the first, nor the only, such place. Numerous bars and LGBT gathering places have existed in West Hollywood for many decades, which were far more foundational to the gay rights movement and LGBT culture generally. Therefore, as explained in detail in the Historic Report, the Factory Building did not make the "exceptional contribution" to American history or culture required to satisfy the National Register criteria for resources that are less than 50 years old.

The pending nomination completely ignores the age of the Studio One use at the Property and fails to mention that it does not meet the 50-year threshold required to satisfy Criterion A. In contrast, as demonstrated by the evidence and analysis in the Historic Report, the Factory Building does not satisfy the Criterion Consideration G requirements. Therefore, because the use of Studio One at the Property occurred within the past 50 years, there is evidence demonstrating that the Factory Building does not qualify under Criterion Consideration G, the pending nomination is wholly inadequate and should be rejected.

* * *

For all of the above reasons, I oppose the pending nomination of the Mitchell Camera Corporation Factory to the National Register of Historic Places and respectfully request that you reject the pending nomination.

At minimum, I request that the nomination be removed from the State Historic Resources Commission's July agenda in order for Commission staff to conduct additional review in light of the information provided herewith. If the nomination is not removed from the agenda, I and/or my representatives will attend the SHRC's meeting on July 29 and plan to formally present our view opposing the nomination. I look forward to your response.

Sincerely,

Nathan Goller
Phyllis Morris Originals
655 N. Robertson Blvd.
West Hollywood, CA 90069

Attachment:
Historic Resources Assessment Report, PCR Services Corp. of Santa Monica

ACKNOWLEDGMENT

A notary public or other officer completing this certificate verifies only the identity of the individual who signed the document to which this certificate is attached, and not the truthfulness, accuracy, or validity of that document.

State of California
County of Los Angeles)

On June 14, 2016 before me, Jane S. Kho, Notary Public
(insert name and title of the officer)

personally appeared Nathan Goller,
who proved to me on the basis of satisfactory evidence to be the person(s) whose name(s) is/are subscribed to the within instrument and acknowledged to me that he/she/they executed the same in his/her/their authorized capacity(ies), and that by his/her/their signature(s) on the instrument the person(s), or the entity upon behalf of which the person(s) acted, executed the instrument.

I certify under PENALTY OF PERJURY under the laws of the State of California that the foregoing paragraph is true and correct.

WITNESS my hand and official seal.

JANE S. KHO
Commission # 2127128
Notary Public - California
Los Angeles County
My Comm. Expires Sep 18, 2019

Signature _____ (Seal)

Nathan Goller

655 North Robertson Blvd.
West Hollywood, CA 90069

Telephone (310) 289-4806
Telefax (310) 289-6870
Email: nate@phyllismorris.com

October 13, 2016

California State Parks
Office of Historic Preservation
1725 23rd Street, Suite 100
Sacramento, CA 95816-7100
Attention: Juliane Polanco, State Historic Preservation Officer

Re: Continued Opposition to Nomination of Mitchell Camera Corporation Factory to National Register of Historic Places

Dear Ms. Polanco:

I represent the ownership of the Factory Building located at 661-665 Robertson Boulevard and 648-652 North La Peer Drive in West Hollywood, California (Property). I certify that I am the General Partner of Robertson Court, a California General Partnership, which holds 90 percent ownership of the Property. I am sending this notarized letter to formally object to the current nomination of the Property to the National Register of Historic Places.

The current nomination is substantially based on the prior nomination that was rejected by the State Historical Resources Commission in July 2016. The current nomination contains little to no substantive changes to the prior nomination. Therefore, I am providing you with my prior objection to the nomination that was submitted to your office and the Commission dated June 14, 2016, and am incorporating that objection into this letter.

I understand that Dr. Margarita Jerabek of ESA PCR will be submitting a separate objection to the nomination in the next few days, and will also be appearing at your October hearing to oppose the nomination.

Sincerely,

Nathan Goller
Robertson Court, a California General Partnership
655 N. Robertson Blvd.
West Hollywood, CA 90069

Attachment: Letter from Nathan Goller dated June 14, 2016, re: *Opposition to Nomination of Mitchell Camera Corporation Factory to National Register of Historic Places*

ACKNOWLEDGMENT

A notary public or other officer completing this certificate verifies only the identity of the individual who signed the document to which this certificate is attached, and not the truthfulness, accuracy, or validity of that document.

State of California
County of Los Angeles)

On October 13, 2016 before me, Jane S. Kho, Notary Public
(insert name and title of the officer)

personally appeared Nathan Goller,
who proved to me on the basis of satisfactory evidence to be the person(s) whose name(s) is/are subscribed to the within instrument and acknowledged to me that he/she/they executed the same in his/her/their authorized capacity(ies), and that by his/her/their signature(s) on the instrument the person(s), or the entity upon behalf of which the person(s) acted, executed the instrument.

I certify under PENALTY OF PERJURY under the laws of the State of California that the foregoing paragraph is true and correct.

WITNESS my hand and official seal.

JANE S. KHO
Commission # 2127128
Notary Public - California
Los Angeles County
My Comm. Expires Sep 18, 2019

Signature _____ **(Seal)**

From:	Saunders, Jenan@Parks
To:	Correia, Jay@Parks; Burg, William@Parks
Subject:	FW: Confidential: Factory restoration - Emails to State Historic Resources Commission opposing National nomination
Date:	Wednesday, October 26, 2016 12:22:43 PM
Attachments:	image001.png

I'm not sure if this went to William directly or not. So I thought I should forward it.

Jenan

Jenan Saunders
Deputy State Historic Preservation Officer
California Office of Historic Preservation
1725 23rd Street, Suite 100
Sacramento CA 95816
(916) 445-7019
Jenan.Saunders@parks.ca.gov
www.ohp.parks.ca.gov

From: Art Davis [mailto:art4gate@me.com]
Sent: Wednesday, October 26, 2016 11:10 AM
To: Saunders, Jenan@Parks
Subject: Fwd: Confidential: Factory restoration - Emails to State Historic Resources Commission opposing National nomination

Sent from Arts iPhone

Art Davis
+1(310) 980 1952
art4gate@me.com

Begin forwarded message:

> **From:** Art Davis <art4gate@me.com>
> **Date:** October 25, 2016 at 5:01:19 PM PDT
> **To:** Jason Illoulian <jason@faringcapital.com>
> **Subject: Re: Confidential: Factory restoration - Emails to State Historic Resources Commission opposing National nomination**
>
> Will be my pleasure I I believe in your vision and agree with the project
>
> Sent from Arts iPhone
>
> Art Davis
> +1(310) 980 1952

art4gate@me.com

On Oct 25, 2016, at 4:57 PM, Jason Illoulian <jason@faringcapital.com> wrote:

Thanks Art!
--

<76CBC74A-3E07-4B74-B8C9-6A4B53FA6B2E[60].png>

JASON ILLOULIAN - CEO
m: 310-995-7399 | jason@faringcapital.com | www.faringcapital.com
659 N. Robertson Blvd, West Hollywood, CA 90069

From: Darren Embry <darren@faringcapital.com>
Date: Tuesday, October 25, 2016 at 12:40 PM
To: Art Davis <art4gate@me.com>
Cc: Jason Illoulian <jason@faringcapital.com>, Darren Embry <darren@faringcapital.com>
Subject: Confidential: Factory restoration - Emails to State Historic Resources Commission opposing National nomination

Dear Art:

If you are able to take 5-10 minutes of your time and send an email to the State Historic Resources Commission (email addresses shown below), Jason and I will be forever grateful. Below are some talking points/ideas for you to use as you wish.

For background, after its nomination being rejected in July, The Factory building has once again been nominated by the same applicants to be deemed eligible for the National Register of Historic Places. A "National" designation will make our vision of restoring the Factory as the centerpiece of the Robertson Lane project more difficult to realize.

Our recognition of the building's history in the community is why we've decided to invest the time and great expense required to restore it. Our program will restore the majority of the building and tell the story of its history. With the fond memories of many in the community, it's the right thing to do. Our plan will actually retain State eligibility; National eligibility will only make things more difficult.

Please send your emails to:
Julianne Polanco, State Historic Preservation Officer:
julianne.polanco@parks.ca.gov
Jenan Saunders, Deputy State Historic Preservation Officer:

jenan.saunders@parks.ca.gov
William Burg, State Historian II: william.burg@parks.ca.gov

Please do NOT cc us, only forward the email once it has been sent. Please call if you have any questions or concerns.

Thanks in advance for your support!

- *I do not believe that the Factory building rises to the level of eligibility for the National Register of Historic Places. It is and has been an eyesore for many years now. The building retains almost nothing related to its former glory as the disco or utility as the camera factory.*

- *The building is tired and cannot continue in its current condition. Freezing it in place as it is now would be the worst thing that could happen for the City, the neighborhood and the property itself.*

- *The history of the building is special to many individuals as their first gay bar, but the discrimination that went on there tarnishes that history. The building simply doesn't have the overarching value that rises to the level of National recognition. State or local significance? Maybe. But National to where the building cannot be touched, I'm shocked that it's even a conversation.*

- *I experienced the building in its heyday as the dance club and theatre. The building today evokes nothing from that period. Too many changes and renovations have occurred. Please do not encumber the Factory building with the National designation as the applicant has requested.*

- *The proposed restoration of the Factory along Robertson will make the building more beautiful than it has been in a generation and will honor the history at the site. The developer is planning to go above and beyond here by restoring the Factory with exhibits that pay homage to Studio One and the Mitchell Camera Factory. Their proposal is a great example of community engagement leading to preservation.*

- *The owner should be able to do what they want with the building. My understanding is that a restoration of the building has been proposed, and has the support of the Los Angeles Conservancy and other local preservation groups. That sounds like the kind of win-win that is too rare in today's contentious preservation environment. It would be a tragedy to get in the way of a thoughtful compromise solution.*

Again thank you!

Jason and Darren

FARING

DARREN EMBRY, DIRECTOR OF COMMUNITY DEVELOPMENT

cell: 323-481-9178 | darren@faringcapital.com | www.faringcapital.com

659 N. Robertson Boulevard, West Hollywood CA 90069

Please consider the environment and print only if necessary.

Confidentiality Notice. The contents of this e-mail message and any attachments are confidential and are intended solely for the addressee. The information may also be legally privileged. This transmission is sent in trust, for the sole purpose of delivery to the intended recipient. If you have received this transmission in error, any use, reproduction or dissemination of this transmission is strictly prohibited. If you are not the intended recipient, please immediately notify the sender by reply e-mail or phone and delete this message and its attachments, if any. Your cooperation will be appreciated.

<image003.png>

From:	Dr. Don Kilhefner
To:	Polanco, Julianne@Parks; Saunders, Jenan@Parks; Burg, William@Parks
Cc:	donkilhefner@sbcglobal.net
Subject:	Submission on Hearing Regarding Studio One in West Hollywood
Date:	Thursday, October 27, 2016 6:07:42 PM
Attachments:	Don Kilhefner WEHOville Jim Crow.htm Don Kilhefner Studio One L.A. Times.mht.msg Don Kilhefner Letter to State Historic Register About Studio One-de.docx

---

Dear Ms. Polanco, Ms. Saunders and Mr. Burg:

I will be unable to attend the hearing Friday (October 28, 2016) in Redlands regarding adding Studio One in West Hollywood to the National Register of Historic Places due to disabilities which makes walking and travel difficult.

I have attached a statement regarding the application, a letter to *The Los Angeles Times*, and an article which was published by WEHOville.com.

I authorize that the above items be allowed to be read at the hearing and included in the record.

Thank you for your consideration and cooperation.

Donald Kilhefner, Ph.D.
Jungian Depth Psychologist
1324 North Stanley Avenue
Los Angeles, CA 20046
donkilhefner@sbcgloal.net
(323) 874-8297
"Gay elders don't whine, they organize."

This email has been checked for viruses by Avast antivirus software.
www.avast.com

Don Kilhefner, Ph.D.
1324 N. Stanley Avenue
Los Angeles, CA 90046
donkilhefner@sbcglobal.net
(323) 874-8297

October 27, 2016

Julianne Polanco
State Historic Preservation Officer

Jenan Saunders,
Deputy State Historic Preservation Officer

William Burg, State Historian II

Dear Ms. Polanco, Ms. Saunders, Mr. Burg:

I am writing to vigorously protest designating the Studio One site in West Hollywood, California, as worthy of eligibility on the National Register of Historic Places.

I apologize for not being present in Redlands in person to make this statement, however, being an old man with two herniated discs in his lower back makes walking and traveling long distances extremely difficult for me.

I would like my statement to be entered into the record of your October 28, 2016, hearing in Redlands along with the attached "Letter to the Editor" of *The Los Angeles Times* and an article by me titled "Jim Crow Visits West Hollywood: Studio One and Gay Liberation" from

WEHOville, West Hollywood's online news outlet. The article provides critically-needed historical information that must to be included in your deliberations in this matter.

I would like to briefly introduce myself to indicate why I think I have standing in this regard. For the past 50 years I have played a continuously important role in the political, communal, intellectual, and spiritual life of gay people in Los Angeles. In 1969 I had a pioneering role in the creation of the Gay Liberation movement in Los Angeles and nationally. In 1971 I co-founded (with Morris Kight) Los Angeles' historically and communally-significant LGBT Center, first-ever Van Ness Recovery House, and, subsequently, numerous other seminal community organizations including (with Harry Hay) the Radical Faeries, an international gay-centered consciousness movement. During the past 15 years my community organizing efforts in Los Angeles have focused on ending age *apartheid* in the gay and larger society. I am also a Jungian depth psychologist. Currently I am finishing a book for publication titled *You'll Never Be Alone Again: Gay Liberation, Community, Identity (Los Angeles, 1969-1979).*

Frankly, I was surprised that anyone would have the audacity to suggest Studio One was historically significant in the 1970's and 1980's. Studio One was just another Los Angeles gay dance hall (along with Circus, Jewel's Catch One and others), larger and glitzier than many, but still just a dance hall for gay partying with the customary short shelf life of dance halls, bars and restaurants. It was not special or unique for "bridging the gap" between the gay and straight communities. There were many more places that promoted gay-straight and multicultural inclusion without practicing the onerous exclusion of Studio One.

I respectfully suggest that proponents of the designation are confusing "significant historic importance" with "fond memories." There were 40-50 gay bars and dance halls in the Los Angeles in the 1970's about which people have pleasurable recall of one sort or another. But I don't believe that "fond memories" is a criteria for eligibility for the National Register. I fully understand and appreciate that gay bars and dance halls, among other venues, where gay people had their first positive experience of being gay are personally important to them. Those places do not, therefore, rise to the level of State or national historical importance. This is certainly true of Studio One.

More importantly, as my "Jim Crow Visits West Hollywood" article documents, with the exception of the gay party contingent, Studio One had a nefarious reputation as a place of racism, sexism, bigotry and discrimination against black men and women that led to numerous gay community demonstrations there. With such a horrendous record on civil and human rights, to designate Studio One as eligible for the National Register would make a travesty of the term "historically significant," turn your back on Studio One's "White Gay Males Only" history, and be an insult to the Gay Liberation movement in Los Angeles which was fighting for social justice for **all** people at the time, not just white, privileged gay men.

Studio One simply had no important connection to LGBT history in Los Angeles either in the establishment of gay identity or the furtherance of the Gay Liberation movement. Neither the club itself nor the club's owner did anything important to further LGBT rights that should qualify as "exceptionally significant" under the National Register standard. It was a commercially run business that practiced illegal race and sex discrimination.

There are places in West Hollywood of historical importance to gay people that are worthy of consideration for the National Register such as Barney's Beanery, the Gay Liberation Front's "Gay Funky Dances" where non-violent civil disobedience was practiced, and the "Touch-In at the Farm" where gays made a public showing of affection and non-violently confronted police terror in bars. These were "brave places" where the Gay Liberation movement was furthered. These places are different from mere "safe places" where gays could go to be themselves. There were many safe places at the time of Studio One, but being a brave place should be the threshold for historic significance.

Given its history, to try to make Studio One into a place "exceptionally significance" is historically delusional, intellectually dishonest, morally offensive, and, frankly, self-serving for the promoters involved. The applicants did not experience this time in gay and lesbian history in the manner that I did in the forefront of Gay Liberation efforts in Los Angeles. There are no other "party sites" like Studio One on the National Register because the National Register recognizes important events and moments in history that furthered movements. Party sites do not rise to this level and should not be considered "exceptionally significant."

In consideration of the fact that Studio One and its owner were not connected to or promoting the Gay Liberation movement of its time and due to the racist, sexist, bigoted and discriminatory acts that occurred at the club, I strongly urge this Commission to reject the pending application. This club is not worthy of representing the gay community or gay history on the National Register.

I appreciate you allowing me to make this contribution to your deliberations.

I appreciate you allowing me to make this contribution to your deliberations.

With warm regard,

(signed)

Don Kilhefner, Ph.D.

Attachments:

"Letter to the Editor," *The Los Angeles Times* (July 27, 2016)

"Jim Crow Visits West Hollywood" Don Kilhefner, *WEHOville (August 5, 2016)*

From: Jeffrey Apter
To: Burg, William@Parks
Subject: Robertson Lane Project
Date: Thursday, October 27, 2016 12:00:12 PM

Dear Preservation Officer Polanco / Deputy Officer Saunders / Historian Burg:

As you are aware, the Factory building was built in 1929 as a camera production shop, later to become a private club & then in 1974 to house Studio One, a local gay dance club. Studio One was one of the gay clubs in West Hollywood where locals could feel safe to dance & party freely without discrimination. As important as this freedom was to individuals, these experiences were far from exclusive to this building.

Times have moved on & the building retains nothing related to its former glory. The building is tired & in a state of serious disrepair. I was recently in the building for a party & my friends commented how they pray there isn't an earthquake while we here because this building would come all the way down. The building is certainly not up to current structural codes.

The demographics of the people who party in the City of West Hollywood has also changed dramatically. It is no longer primarily a gay city, but indeed a destination city for all varieties of residents and visitors. The building may be special to many individuals who experiencedpersonal events there, but it is the memory, not the building that is most important. The people who frequent The Factory now I would venture, have no clue about the history of the building.

The building may have local or at a stretch State significance, but nowhere near National level, where the building cannot be touched. Not a chance. That Is ridiculous. The proposed redevelopment of the land is vital to the city & to Robertson Blvd. For the most part the west side of Robertson Blvd is currently a dead zone.The Robertson Lane project will be a serious game changer. It will create badly needed foot traffic, have great stores for the locals & provide parking for the whole area.

The developer has designed a magnificent project . The proposed restoration of The Factory will make the building more beautiful than it ever was, while honoring & preserving the history of the site.

I absolutely do not believe that The Factory building rises anywhere near the level of eligibility for the National Register of Historic Places. I’m frankly shocked it’s even up for consideration. Freezing it in place, as it is, would be a disaster for the whole area & the building itself. The proposed plan is a wonderful compromised solution & should be allowed to proceed.

Sincerely

Jeff Apter

Local Businessman

Sent from my iPhone
Sent from my iPhone

From: Kaplan, Keith
To: Polanco, Julianne@Parks; Saunders, Jenan@Parks; Burg, William@Parks
Subject: The Factory - West Hollywood
Date: Wednesday, October 26, 2016 10:50:12 PM

Dear Julianne/Jenan/William-

I am writing to you in reference to the proposed restoration of the Factory for integration into an exciting new hotel project along Robertson Blvd. in West Hollywood. As a local resident and active Board member of the Chamber of Commerce I have attended a number of events hosted by Faring Capital to introduce this project to the community and solicit reaction and input from our residents. Their efforts to engage the community, restore and incorporate the existing building in the new design and honor the history of the businesses that were housed here reflects a rare developer who truly listens and cares. The result of their hard work and collaboration with local city government, residents and the business community is a project that will be a landmark, both in design and purpose.

I experienced the building in its heyday, taking my first steps into gay culture at Studio One. I saw legendary performances at both the Backlot and Rose Tattoo. Few understand the personal historical significance and meaning of this location more than I do. The evenings I spent here in the late 1970's and early 1980's shaped my life. But it is these memories that are important, not the building itself.

The building of today evokes nothing from this period. It has been remodeled and repurposed so many times. Rather, it stands as the rather drab industrial building that it is, in declining condition and both functionally and economically obsolete. The building has none of the values or elements that qualify it for eligibility to the National Register of Historic Places.

The developers and architects have gone to great lengths and at great expense to create a spectacular design that incorporates a restoration of the Factory in an extraordinarily thoughtful and creative way. It is the stuff of awards. Further, the developer has committed to working with some of us in the community to create exhibits that will be housed in this new project that will pay homage to Studio One and the Mitchell Camera Factory. Isn't this a better way to preserve the memories of the life of the Factory as it continues into a new era with a new and vital role in West Hollywood?

My understanding is that the Los Angeles Conservancy and other local preservation groups have reviewed and support the plans for the new project. I am in full agreement. Allowing Faring Capital to move forward with their proposed plans to restore and integrate the Factory into their new Robertson Lane project is a win-win bringing new life and energy to Robertson Blvd, honoring the history and significance of the businesses that were housed in the Factory and even maintaining - and improving - the design integrity of the Factory structure itself.

I urge you not to commit the Factory to the National Register of Historic Places and to

allow this exemplary project to move forward.

Sincerely,

Keith Kaplan

Sotheby's International Realty

9255 Sunset Boulevard, Mezzanine

Los Angeles, CA 90069

CalBRE #01933707

c 323.646.7791 d 310.888.3714

keith.kaplan@sothebyshomes.com

www.keithkaplanproperties.com

The information in this electronic mail message is the sender's confidential business and may be legally privileged. It is intended solely for the addressee(s). Access to this internet electronic mail message by anyone else is unauthorized. If you are not the intended recipient, any disclosure, copying, distribution or any action taken or omitted to be taken in reliance on it is prohibited and may be unlawful.

The sender believes that this E-mail and any attachments were free of any virus, worm, Trojan horse, and/or malicious code when sent. This message and its attachments could have been infected during transmission. By reading the message and opening any attachments, the recipient accepts full responsibility for taking protective and remedial action about viruses and other defects. The sender's company is not liable for any loss or damage arising in any way from this message or its attachments.

Nothing in this email shall be deemed to create a binding contract to purchase/sell real estate. The sender of this email does not have the authority to bind a buyer or seller to a contract via written or verbal communications including, but not limited to, email communications.

From: Darin Weeks
To: Polanco, Julianne@Parks; Burg, William@Parks; westhollywoodheritageproject@gmail.com
Subject: West Hollywood Factory Building nomination - DENY PLEASE
Date: Wednesday, June 29, 2016 8:11:04 PM

Hello,

Please DENY this application. It's an old warehouse and kind of an eyesore. There is nothing friendly about it to pedestrians at the street level and the footprint is massive. Get rid of it.

It's just absurd to preserve a building for things that happened there alone. I'd say the same thing even if the baby Jesus was born there!

Tear it down please. I'm a huge backer of historic preservation but this is just absurd. What's the deal — are people trying to preserve with the ulterior motive of preventing development? That's my guess.

Darin Weeks

From: David Cooley
To: Polanco, Julianne@Parks; Burg, William@Parks
Subject: ROBERTSON LANE
Date: Monday, July 25, 2016 3:52:11 PM

Hi Julianne and William,

I own The Abbey Food & Bar in West Hollywood, known as "The Best Gay Bar in the World" and one of the most popular nightlife destinations in the country. I just celebrated my 25th year in business at The Abbey, directly across the street from the proposed Robertson Lane project. I am a big fan of the project because I think it is a great addition to our community. There is a vocal minority trying to stop the project and I would like to ask that you delay the designation of eligibility for the National listing of historic places so you can take more time to review and consider all the information.

I have been in the neighborhood a very long time as a business owner. Various people are confusing all the facts with myths about the building and promoting them incorrectly. My understanding is that the nomination is not being presented or supported by the owner, who has owned the building since 1964 and understands the building and its history better than anyone. Please take the time to carefully evaluate the facts. Eligibility is forever and it must be correct. The building in its current state is an eyesore and it is not worth saving.

The new proposed project at Robertson Lane will be a better use of the building and help our community.

Best,

David Cooley
CEO/Founder of The Abbey
692 North Robertson Blvd
West Hollywood

From: Darren Gold
To: Polanco, Julianne@Parks; Burg, William@Parks; Saunders, Jenan@Parks
Subject: The Factory Building
Date: Wednesday, October 26, 2016 6:05:00 PM

Dear Julianne, William, and Jenan,

I am writing regarding The Factory building in West Hollywood. I truly **do not** believe that this building rises to the level of eligibility for the National Register of Historic Places. The building retains almost nothing related to its former glory as a disco or use as a camera factory, nor are either of those things worthy of national recognition.

I have been inside the Factory many times over many years, and while I have fond memories of those times, they in no way indicate that the building should be untouched and left to sit while the neighborhood around it changes at a fast pace.

In addition, the building itself is now a tired eyesore, and is used as just another nightclub that could be in any building anywhere. There is no reverence for the site and in fact it is covered in green paint that obscures the entire building. However, the proposed restoration of the Factory on the Robertson side will make the building more beautiful than it has been in years and will specifically honor the history at the site in a way that more people can appreciate than the just the clubgoers who go in and out on any given night. More importantly the new project will give the neighborhood a fantastic new and needed resource.

I earnestly ask you to not encumber the Factory building with the National designation as is being requested.

Many Thanks,

Darren Gold

WEST HOLLYWOOD
HERITAGE PROJECT

July 27, 2016
State Historical Resources Commission
RE: Mitchell Camera Corp/Studio One nomination - Response to July 15 PCR memorandum

Dear Commissioners,

This is a response to arguments made in PCRs July 15th memorandum.

In regards to Mitchell Camera Corporation, PCR states

> George Mitchell designed the mechanism for the NC model during a period when he was no longer employed by the company and therefore there is no evidence or support to show that the mechanism was invented in the factory building. Furthermore, the utilitarian factory structure did not directly contributed to the development of Mitchell's internal mechanism. Therefore, the factory building cannot be significant in association with the invention of Mitchell's revolutionary mechanism or camera design. (Jerabek, Margarita; Taylor, Chris, 2016)

The nomination application contains several sources that show that the NC and BNC were designed and manufactured at The Factory, and that George Mitchell retired after the launch of the BNC.

Attached are pages from H. Mario Raimondo-Souto's book, *Motion Picture Photography: A History, 1891-1960*. This academic book is used in university and college film programs across the country.

In *Motion Picture Photography: A History, 1891-1960*, page 142-146, Part III entitled "The Thirties" starts off with Mitchell Camera Corporation and the design of the NC: "George Mitchell designed a new intermittent mechanism known as NC that eliminated gear meshing and employed eccentrics and sliding surfaces." (Raimondo-Souto, 2007) The book also references U.S. Patent 1,930,723.

U.S. Patent 1,930,723 is dated as filed on January 11, 1932 and patented on October 17, 1933. The inventor of the NC film movement mechanism is stated as "George A. Mitchell, Los Angeles, Calif., assigner to Mitchell Camera Corporation, West Hollywood., Calif." (Mitchell G. A., Film Movement Mechanism, 1932, 1933)

No specific street address is stated on the patent; however, since West Hollywood is shown as the city of invention it can be safely assumed that George Mitchell's design of the NC film movement mechanism was done at the Mitchell Camera Corporation factory in West Hollywood. (Mitchell Camera Corporation, 1934)

Also, in a December 1938 American Cinematographer article, photographer Ira Hoke gives a chronological history of Mitchell Camera Corporation. Hoke says this about the Mitchell Camera Corporation engineers when they designed the Mitchell NC-

> Encouraged, the company set the entire engineering department of its big new plant in West Hollywood, where increased expansion had made necessary a move of quarters in June, 1929, upon the problem of a still more silent camera (Hoke, 1938)

As for the design of the BNC, on page 144 of *Motion Picture Photography: A History, 1891-1960* it says that-

> the use of a blimp required methodical work…. This was a limitation and a time-consuming operation for the camera crew. George Mitchell and his engineers decided to overcome this and conceived a truly silent studio camera. In 1934, after several trials, the new Mitchell BNC model was launched onto the market.

In addition, the Mitchell BNC was patented as the "Sound Insulated Motion Picture Camera," U.S. Patent 2,088,714, filed May 7, 1934 and patented on August 3, 1937. The invention is credited to George A. Mitchell of the "Mitchell Camera Corporation, West Hollywood, Calif." (Mitchell G. A., Sound Insulated Motion Picture Camera, 1934, 1937)

Regarding the date of George Mitchell's retirement from the Mitchell Camera Corp, *Motion Picture Photography: A History, 1891-1960* says, in a section about the BNC, "ironically, after this outstanding work, George Mitchell, the creator of this mechanical jewel, resigned from this firm." (Raimondo-Souto, 2007)

In regards to Studio One, the nomination application addresses most of the points brought up in the PCR review.

The PCR review states that no riots ever happened at Studio One like at the Stonewall Inn. This is true; however, the Stonewall riots did not directly result in full civil rights for gays. The Stonewall riots are a single event in the overall trajectory that has led to today's partial civil rights for gays and lesbians. Studio One opened nine years after the Stonewall Riots. And it shows the growth of power and the development of sophistication in the fight for mainstream acceptance and civil rights for gays and lesbians.

At that time, many gay bars were owned by the mafia, or by heterosexuals, looking to make money off the gay community, and they were routinely raided by police. Studio One was owned and operated by an out gay man, Scott Forbes. Forbes protected his bar and its patrons from

police harassment and raids; not by the usual covert pay-offs and favors but by having a prominent public profile, becoming a board member of the Chamber of Commerce, and by forming relationships with the sheriff and fire departments and making donations to their causes.

In a 1976 Los Angeles Times article, a reporter quotes a recent Christopher Street magazine article on Studio One about Scott Forbes-

> 'I'm into the common man, giving him what he finds enjoyable, because I find that he's the one who stays with you,' Forbes maintains – 'rather as if… he were the latter-day Father Flanagan and the Studio a newage Boys' Town.' (Slater, 1976)

Regarding the Joan River's hosted APLA AIDS benefit, the event was reported on by the Los Angeles Times on May 17th, 1984, and it does appear on APLA's history timeline. (Los Angeles Times, 1984) (APLA)

In regards to the amusement park events referred to as "Gay Days" in the PCR review – from the way the term is used in the review, it is safe to assume "Gay Days" refers to the generic term for a one-day event that promoters or gay rights groups put on at amusement parks in the US and Canada. "Gay Days" are not related to the private parties arranged and organized by Scott Forbes, Carol Taylor-DiPietro, and Forbes' Tavern Guild of Los Angeles.

Forbes put on the very first gay and lesbian private parties at any amusement park in 1978. Our nomination talks about this extensively. (It is likely the early "Gay Days" were inspired by Forbes' gay and lesbian private parties.) A detail not in the nomination is that once the contract was signed for the Gay Night at Disneyland, Forbes invited Disney executives to Studio One in order to try to quell their anxiety and to try to show them they had nothing to fear from homosexuals. "That was a little shock for them," said Forbes. (Thurner, 2002)

Regarding the PCR review referring to Studio One as "LGBT friendly" – the Urban Dictionary defines the term gay-friendly as "tolerant of gay people." Studio One was not tolerant of gay people, Studio One was gay. Studio One was conceived, owned and operated by a gay man and it catered to only gay men. (Slater, 1976)

Lastly, in regards to the PCR report's integrity assessment of The Factory, the nomination application addresses all the points put forth in the assessment.

Thank you for your time and consideration.

Sincerely,

Kate Eggert
Krisy Gosney
West Hollywood Heritage Project

Works Cited

APLA. (n.d.). *History*. Retrieved December 2015, from APLA: http://www.apla.org/about-apla/history.html

Hoke, I. (1938, December). *Mitchell Camera Nears Majority*. American Cinematographer.

Jerabek, Margarita; Taylor, Chris. (2016). *Memorandum: Peer Review.* Santa Monica: ESA PCR.

Los Angeles Times. (1984, March 7). *Joan Rivers Sets AIDS Benefits*.

Mitchell Camera Corporation. (1934). *Mitchell Motion Picture Cameras* Catalog. West Hollywood, CA.

Mitchell, G. A. (1932, 1933). *Patent No. 1,930,723.* U.S.

Mitchell, G. A. (1934, 1937). *Patent No. 2,088,714.* U.S.

Raimondo-Souto, H. M. (2007). *Motion Picture Photography: A History, 1891-1960.* Jefferson, North Carolina: McFarland & Company, Inc., Publishers.

Slater, J. (1976, August 11). *Discoteques Dance To Another Tune*. Los Angeles Times.

Thurner, J. (2002, February 7). *Scott Forbes, 57; Ran Dance Palace*. Los Angeles Times.

PART III
THE THIRTIES

19. Cameras

During the thirties sound technology was consolidated in many branches of filmmaking. We will see in other chapters how the changes affected film studios and reached other fields of film technology. In the theaters the variation of standards was a shock because film projection equipment required renewal or adaptation. This implied great investments at a moment when the Depression was still felt. But sound movies had now a special attraction for audiences and the profits soon overcame the difficulties on both sides of the film business.

American studio cameras

The camera world of the film industry reflected the changes in technology. Shooting at sixteen frames per second and the use of the hand crank were definitely abandoned. The latter, however, lasted some time as a heroic resource for some newsreel stringers or short-film makers working with vintage equipment, but now turning the handle three times. But the electric motor and the small spring driven camera soon filled the gap and the crank handle was later an accessory useful only to help thread the film or to be used on special occasions.

Hollywood studios now needed new equipment suited to their new requirements. The two American studio camera manufacturers continued battling to impose their products. In the three years after the coming of sound, Bell & Howell had lost their preference among cinematographers. Many improvements had been added to the Mitchell Standard and High Speed cameras that appealed to their users. One was its easy rack-over system for framing and focusing without rotating the lens turret or moving the sunshade and filter holder, which took too much time. Adjusting the shutter angle while shooting by means of a handle was also appreciated. The refinements of the internal iris and four-way mattes were other advantages to make camera tricks easy. Cinematographers soon realized that this was the most practical and dependable camera in the industry and that it was also easily adaptable to the requirements of sound.

This condition was fundamental to win the battle for preferences. In 1932 the Mitchell Camera Company took an important step forward. George Mitchell designed a new intermittent mechanism known as NC that eliminated gear meshing and employed eccentrics and sliding surfaces (U.S. Patent 1930723). This was an ingenious way to avoid some of the noise from the mechanism. The construction of this movement demanded extreme

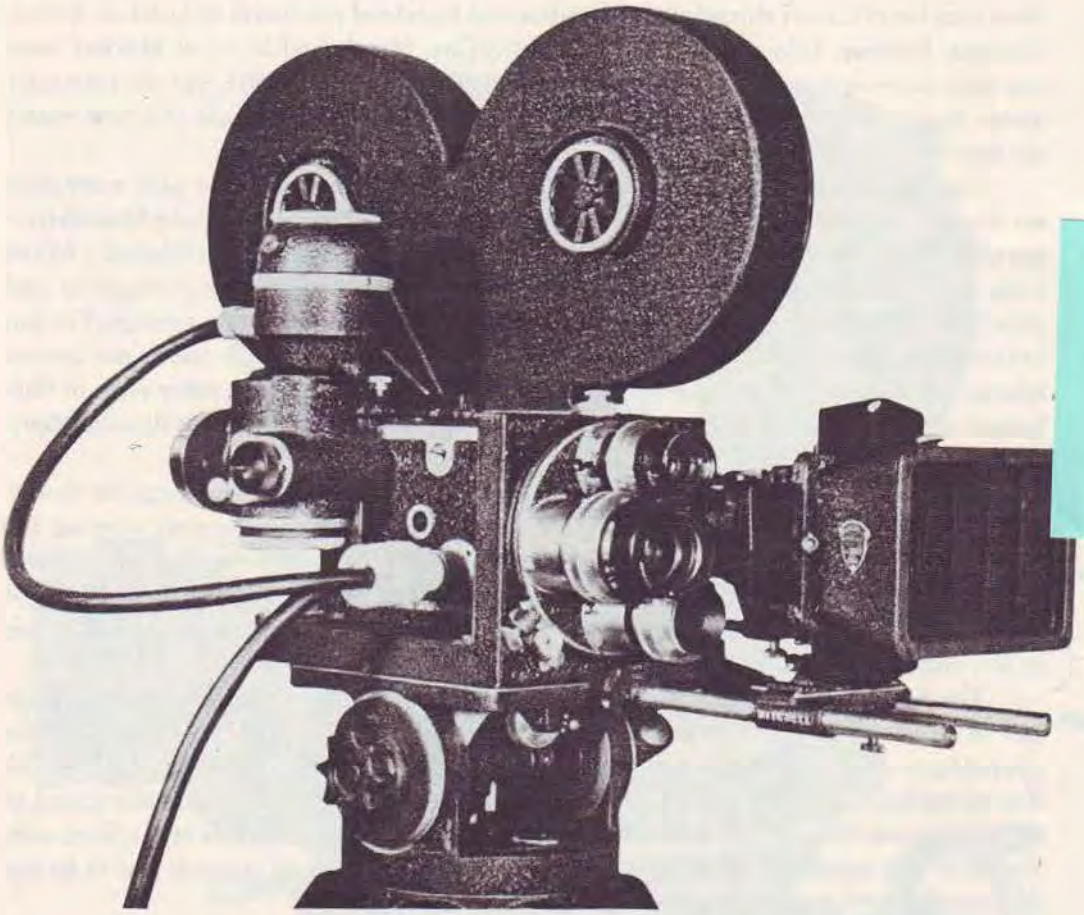

The Mitchell NC camera (*courtesy Mitchell Camera Corp.*).

tolerances of the parts, which were machined and lapped to 0.0001 in. and polished to a 0.0005 in. tolerance in the register pins. From 1932 to 1935 the Mitchell NC movements were made in six models named D, E, F, G, H and I, with differences according to the type of shutter used, long or short dissolve mechanism, the last being the regular one used after 1935.[1]

The new model of the Mitchell camera that appeared in 1932 was also named NC (meaning News Camera). The new camera included the noiseless movement, a hand dissolve (instead of the automatic shutter), a miniature reference shutter, a buckle trip and the improved monitoring viewfinder conceived at the end of the twenties with upright image and built-in mattes. The NC model differed from previous models in not including the floating iris system, very little used after the end of the silent films. But its most valued feature was its silent operation at 35 dB, an impressive figure for a camera without a blimp. After this, the Bell & Howell Standard finally lost its small chance to be a studio production camera and ended up being used in the newsreel field, in titles, animation, special effects or laboratory work.

The Mitchell NC was soon totally accepted by all Hollywood studios, newsreel and short film companies and film producers in many cities of the Union. Many orders came also from

their long list of clients abroad such as studios and high level producers in London, Berlin, Calcutta, Bombay, Tokyo, Buenos Aires, Mexico City, Manila and Moscow. Mitchell cameras were more expensive than many other brands on the world market, but the particular design features of this instrument and its outstanding workmanship made this new model the best solution for an exacting selection.

The NC model required the use of a blimp in the film stage. As in the past, many camera departments of the Hollywood studios made their own blimps. Soon Raby Manufacturing Co. of Hollywood manufactured a practical and easy to use blimp; it included a follow focus control and an automatic parallax corrected monitoring viewfinder. A magnifier and pilot light was built in to simplify control of the lens focus and diaphragm settings. The top of the blimp was spring driven and was counterbalanced to allow easy access to the camera interior. This blimp was a standard item with Mitchell NC cameras for many years in Hollywood and abroad. Only one big studio still used its own blimp during this decade; Metro Goldwyn Mayer.

The use of a blimp required methodical work. Framing and focus checking, the change of lenses, footage control and adjusting the shutter demanded continuously opening the blimp doors. This was a limitation and a time-consuming operation for the camera crew. George Mitchell and his engineers decided to overcome this and conceived a truly silent studio camera. Renowned cinematographers like Gregg Toland were consulted in reference to the many practical details of the new item of equipment.[2]

The development of a prototype took several months. New concepts in camera design had to be adopted. It had to be a camera with the NC features but completely silent for operating on film stages where the microphone was often very near the shooting unit. The lens turret had to be eliminated since was one of the sources through which the sound of the shutter was filtered. Consequently the camera required only one lens at the front with the focus ring controlled from both sides and the back. All camera controls had to be easily accessible without opening the camera door.

The magazine had to be silenced by means of a special cover adapted to the focusing and shooting positions. The automatic dissolve controls were installed again as a useful feature. All camera controls were available at the back of the unit. The new camera box had to be small in size, relatively light in weight and conceived to damp the still audible 35 dB noise of the NC model. The new model also had to be very compact in relation to the best camera blimp available on world markets while maintaining a functional and streamlined appearance.

In 1934, after several trials, the new Mitchell BNC model was launched onto the market using the unsold Serial No.3 camera inside it.[3] This model totally covered the expectations of Hollywood cinematographers. For experts in Hollywood and the world's other film studios this was the finest camera ever designed: some called it the Rolls Royce of cameras. They felt that it was a fully dependable item of equipment and everything they wanted for easy work on a film stage, achieved without awkward changes. The new camera was lighter than an NC model with a blimp: 120 lbs. instead of 173 lbs. The running noise dropped to a value of only 21 dB.

Ironically, after this outstanding work, George Mitchell, the creator of this mechanical jewel, resigned from this firm. The new camera caught the attention of many Hollywood studios. The first two units, serial numbers BNC 1 & 2, were sold on August 17, 1934, to the Samuel Goldwyn Studios, as recommended by Gregg Toland. A BNC camera rented to the United Artists Studio was used for shooting *Stella Dallas* in 1937. Later on Gregg Toland used it during 1938 for *Wuthering Heights* in the Goldwyn Studios. The Serial No.2 BNC

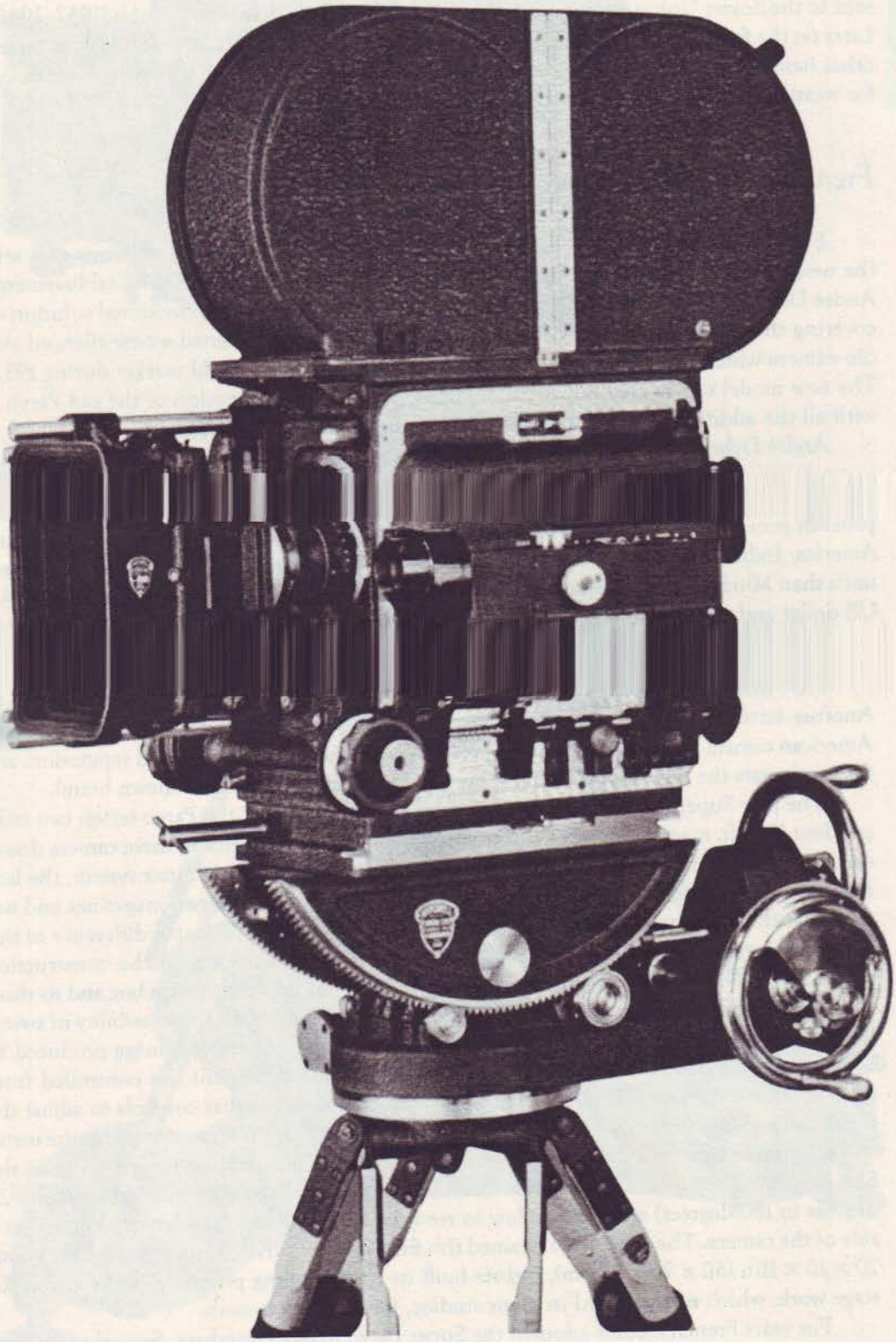

Mitchell BNC studio camera (courtesy Mitchell Camera Corp.).

was rented in 1940 to RKO where Toland filmed *Citizen Kane* (1941). The second big purchase was ten units delivered to Warner Bros. Studios in 1938. Another BNC camera was sent to the Soviet Union during the war and used for shooting *Ivan the Terrible* (1942–1946). Later on the firm stopped the production of this model when important priorities demanded other items. In the postwar period the Mitchell BNC started a famous trajectory, maintained for nearly three decades.[4]

French studio cameras

European camera makers were aware of the importance of sound requirements and the new techniques demanded by shooting on a film stage. In France, the Etablissements André Debrie offered first-rate motion picture equipment. After the provisional solution of covering their Parvo Model T with an ingenious blimp, they designed a new silenced studio camera which, like the Mitchell NC, was launched onto the world market during 1932. The new model was named Super Parvo and it was an enlarged version of the old Parvo L with all the additional facilities that a silent studio camera now required.

André Debrie knew very well the preferences of the vast international market they had patiently penetrated for over twenty years, covering most of the European countries, Japan, South America, India and Arabia and other Asian countries. In this decade they sold many more units than Mitchell, mainly because of the lower exchange rate of the French franc against the US dollar and that the operators felt safer working with equipment they already knew well. Another factor was that European cinematographers used different methods from those of American camera operators. This firm's products were of excellent quality and reputation, and for many years the film studios of the above areas were used to this well known brand.

The new Super Parvo followed the same design principles of the Parvo series: two independent 1000 ft. magazines placed inside the camera in parallel position, three camera doors, one at each side of the unit and the third one at the front with the shutter system, the lens and the sunshade filter holder. The motor was situated between the two magazines and was of the synchronous type 110 or 220 or 24-volt DC variable speed. The main difference of this studio camera compared with the previous silent movie version was in the construction design, with a less noisy mechanism and the noise dampening of the camera box and its three camera doors. The viewing system was based as in the Model L with the possibility of swinging the film channel and aperture plate to one side in order to see the image produced by the lens through the film or through a ground glass. This movement was controlled from the back of the camera. Also in the rear of the unit there were other controls to adjust the lens focus and iris, to turn the motor shaft, operate the camera, the viewer eyepiece, the meter and the frames counters. The intermittent drive used pilot pins and a pressure device in the film channel. The control for the automatic fade system and the shutter aperture (from 25 degrees to 180 degrees) and the window to read the focus values of the lens was placed at a side of the camera. The camera maintained this firm's classic parallelepiped shape sized about 20 × 10 × 11in (50 × 25 × 27 cm). Debrie built its classic rolling pedestal, ideally suited for stage work, which was standard in many studios, for this new camera.

For years French studios adopted the Super Parvo in large numbers. Several units were available in Paramount-Saint Maurice, Pathé-Cinéma in Joinville-le-Pont and Billancourt, Boulogne, Francoeur, Marcel Pagnol or Victorine. In other European countries the Super Parvo was standard in the new Cinecittà Studios of Rome and in Sevilla Estudios of Madrid. Georges

Oct. 17, 1933. G. A. MITCHELL 1,930,723

FILM MOVEMENT MECHANISM

Filed Jan. 11, 1932 2 Sheets-Sheet 1

Fig. 1

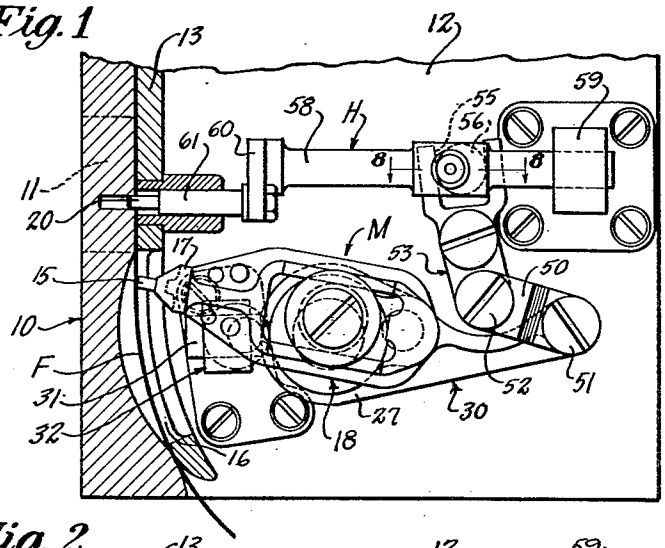

Fig. 2

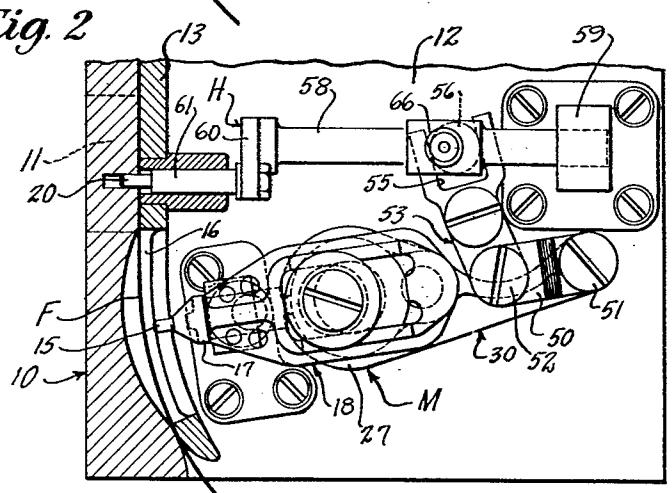

Fig. 3

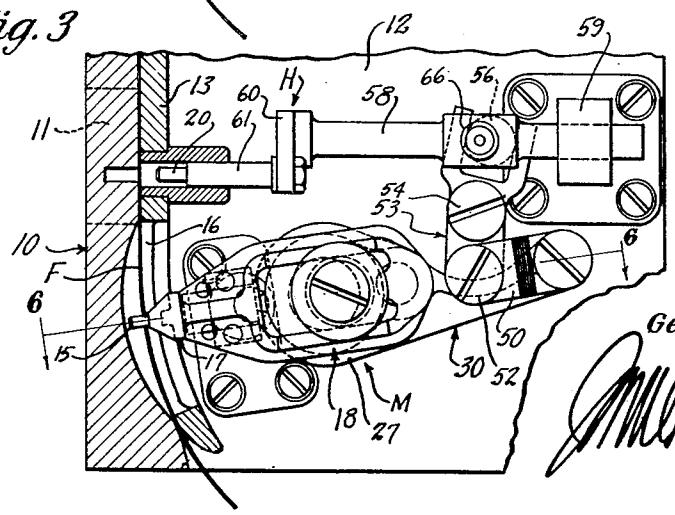

Inventor
George A. Mitchell.

Attorney.

Oct. 17, 1933. G. A. MITCHELL 1,930,723

FILM MOVEMENT MECHANISM

Filed Jan. 11, 1932 2 Sheets-Sheet 2

Fig. 7

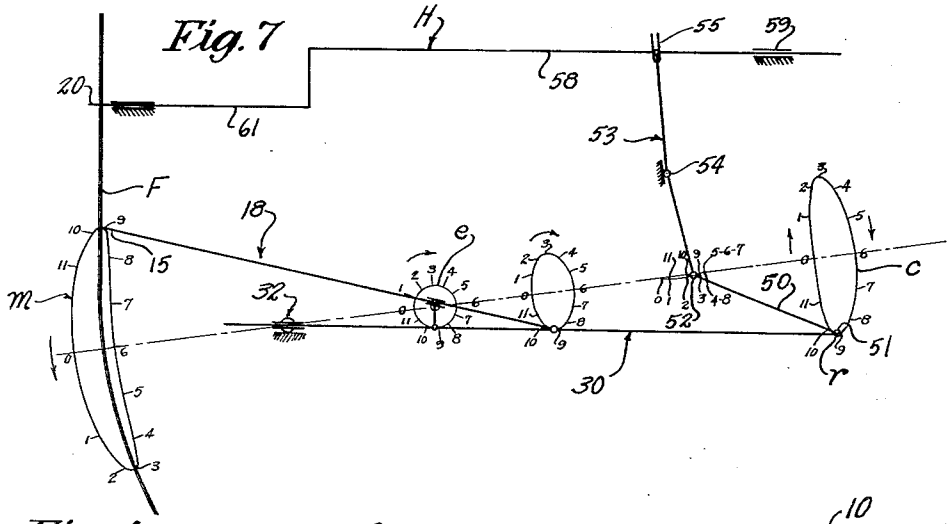

Fig. 4

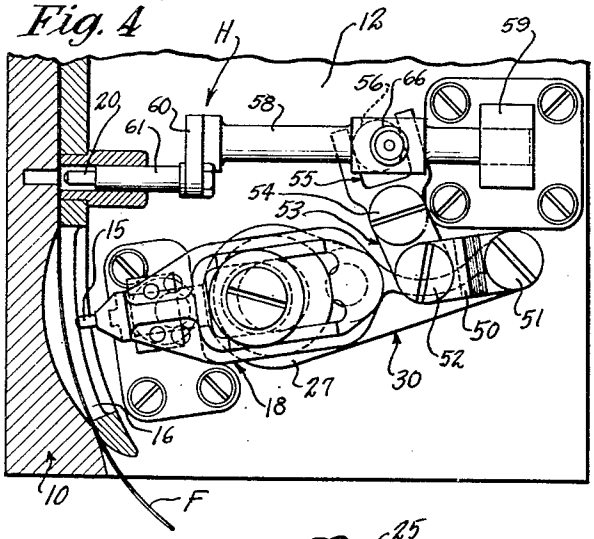

Fig. 5

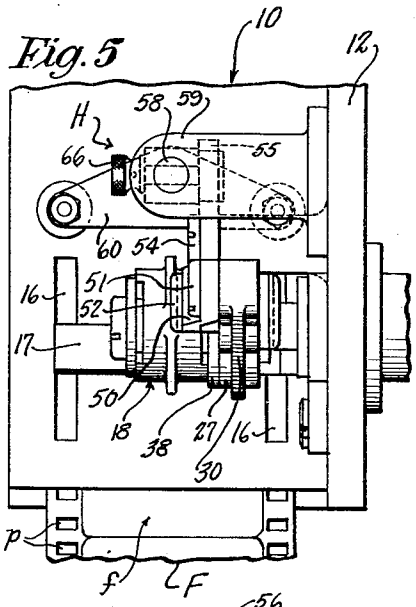

Fig. 6

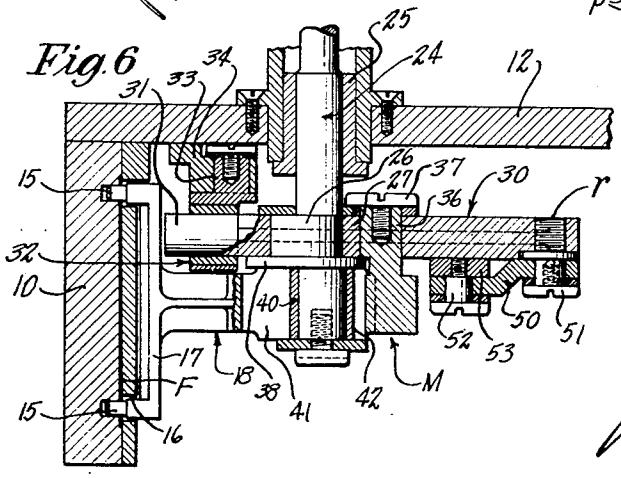

Fig. 8

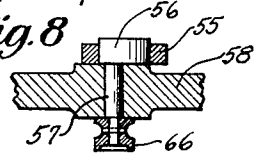

Inventor
George A. Mitchell

Attorney.

Patented Oct. 17, 1933 1,930,723

UNITED STATES PATENT OFFICE

1,930,723

FILM MOVEMENT MECHANISM

George A. Mitchell, Los Angeles, Calif., assignor to Mitchell Camera Corporation, West Hollywood, Calif., a corporation of Delaware

Application January 11, 1932. Serial No. 585,836

12 Claims. (Cl. 88—18.4)

This invention relates generally to intermittent film movement mechanisms for motion picture cameras and the like, and more particularly to that type of film movement which may be characterized generally as involving an oscillative claw arm operable intermittently to engage and pull down the film, and film holding mechanism operable on the film alternately with the claw arm to hold the film in proper register with the exposure aperture while not being moved by the claw arm.

The present invention is an improvement upon the film movement disclosed in my U. S. Patents No. 1,851,400 issued March 29, 1932 and No. 1,849,880, issued March 15, 1932. The mechanism disclosed in said patents involved an oscillative claw arm reciprocated towards and away from the film by a primary driving arm pivoted to the rear end of the claw arm and itself driven by an eccentric on a rotating drive shaft, the driving and claw arms being constrained at their pivoted ends to substantially straight line movement toward and away from the film by a slide pivot mounting. The claw arm was then oscillated cooperatively with its reciprocation by means of a second eccentric on the drive shaft, the claw arm being arranged intermediate its ends to slide longitudinally and pivot on said second eccentric. This driving arrangement for the claw arm resulted in a certain point on the claw arm having a circular arc motion during the time the claw arm was disengaged from the film. There was then connected to the claw arm at said point of circular arc motion a motion transmitting arm which had at the center of that circular arc a pivot connection to motion transmitting means operating the film holding or register pin mechanism. By this means, during the time the claw arm was out of film engagement, the motion transmitting arm simply pivoted on the center of that circular arc and no motion was imparted to the register pins, then engaging the film. As the claw arm moved to engage the film, however, its point of circular arc motion left the path of said arc and so acted through the motion transmitting arm and the balance of the register pin operating means to withdraw the register pins from the film.

It may be stated as an object of the present invention to provide a movement having certain characteristics in common with my prior movement described above, but improved as regards motion characteristics in engaging, pulling down and withdrawing from the film; as regards the connective mechanism driving the pilot pin mechanism; and finally, as regards general features of design, as simplicity, compactness, reduction of accelerations, etc.

The present invention, in its preferred embodiment, involves, as does my prior movement, a primary driving arm operated by an eccentric on a drive shaft and provided to the rear of the eccentric with a pivotal connection to the rear end of the claw arm, and a second eccentric on said shaft and on which the claw arm slides and pivots. The driving arm, however, has a forwardly extending portion, that is, a portion extending toward the film, which portion has at its forward end a slide pivot mounting. This results in the point on the driving arm at which the claw arm is pivotally connected describing a path which may be described as a kind of ellipse, whose major axis is perpendicular to the center line of the claw arm, and this motion path is thus imparted to the rear end of the claw arm. The second eccentric on the drive shaft then forms a slide pivot for the claw arm, as in the prior movement, but the throw of this second eccentric is preferably small in the present case, both the reciprocation and the oscillation of the claw arm being derived principally from the larger elliptical movement given its rear end by the driving arm. The second eccentric, in the preferred form of the present movement, is thus of small throw, its function being principally to modify in a desired manner described hereinafter the motion characteristics of the claw arm rather than itself acting in the main to oscillate the claw arm, as in the prior movement. It will therefore be understood that although I may in many cases prefer an eccentric of small throw, as illustrated in the present application, that this eccentric might be given larger throw, thereby causing it to enter more largely into the swinging of the claw arm, or the eccentric might be reduced to zero throw, in which case it would be simply a fixed slide-pivot.

However, when this slide pivot is a rotating eccentric, the beginning of the pull-down stroke of the film engaging pins on the claw arm is retarded, so that the pins are permitted to move into engagement with the film perforations along straighter lines, as well as more fully into the perforations before substantially moving the film, the result being that "sawing" of the pins on the perforations during the pull-down is materially reduced. Further, when the slide-pivot is an eccentric the length of the claw

arm for a given pull down distance is reduced, thus compacting the mechanism.

The driving arm is extended rearwardly from the point to which the claw arm is pivoted, and because of the nature of the operating and guiding means of said driving arm, has a substantially circular arc motion during the rearward half of the motion cycle of the arm, which period corresponds to the time the claw arm is out of film engagement. A motion transmitting link or arm is then pivoted to the driving arm at said point of circular arc motion, and the other end of said motion transmitting arm is given a pivotal connection, at the center of said circular arc, to the pilot pin operating means, in the manner suggested in my prior application Ser. No. 447,295 as outlined above. Thus during the return stroke of the claw arm, the rearward end of the driving arm describes a circular arc, and the motion transmitting arm connected to the rear end of said driving arm swings on its pivotal connection at the center of said arc, without causing movement of said pivotal connection; and at the time the claw arm engages the film, the rearward end of the claw-arm driving arm departs from said circular arc, and so causes the motion transmitting arm pivoted thereto to move longitudinally, whereupon its pivotal connection with the register pin mechanism departs from the center of said circular arc to cause operation of said mechanism to withdraw the register pins from the film.

The invention will be more fully understood from the following detailed description of a present preferred embodiment thereof, reference for this purpose being had to the accompanying drawings, in which:

Fig. 1 is an elevation, partly in section, of my movement showing the claw arm in position just prior to engaging the film and the register pins just prior to withdrawing from the film;

Fig. 2 is a view similar to Fig. 1, but showing the claw arm out of engagement with the film and mid-way in its return path, while the register pins are stationary and in engagement with the film;

Fig. 3 is a view similar to Fig. 1, but showing the claw arm mid-way in its pull down stroke and the register pins fully withdrawn from the film;

Fig. 4 is a view similar to Fig. 2, but showing the register pin arm withdrawn so that the register pins are disengaged from the film at the same time the claw arm is withdrawn from the film;

Fig. 5 is a rear view of the movement, the parts being about in the position illustrated in Fig. 2;

Fig. 6 is a section taken as indicated by line 6—6 of Fig. 3;

Fig. 7 is a diagrammatic layout of the movement, showing the motion path of certain points in the mechanism; and

Fig. 8 is a detail section taken on line 8—8 of Fig. 1.

In the drawings the numeral 10 designates a vertical aperture plate having an exposure aperture 11, and numeral 12 designates a vertical frame plate arranged at right angles to and extending rearwardly from an edge of plate 10, said plates 10 and 12 being adapted to be mounted in any suitable manner in the motion picture camera, not shown. Spaced rearwardly from aperture plate 10 and extending at right angles from plate 12 is a guide plate 13, between which and the aperture plate is the guideway for the film F. Below the exposure aperture curves rearwardly to conform to the curvature of motion of the film moving means, generally designated at M. The film is moved intermittently in the guide way by the film moving means, while during the period of dwell, that is, alternately with the periods of pull down, the film is engaged by the film holding or register mechanism H, which registers successive film frames *f* with the exposure aperture 11.

The film is intermittently advanced by means of a pair of film moving claw pins 15, which are of proper size and are so spaced as to fit nicely in the film perforations, said pins extending through vertical slots 16 in plate 13 from the ends of a cross arm 17 mounted on the forward end of a swinging claw arm 18, said claw arm being operated as hereinafter described to cause its claw pins 15 to intermittently engage the film perforations *p* and draw the film downwardly (or upwardly) through successive frame lengths.

Pilot pins 20, which are also of proper size and shape to fit nicely in the film perforations, are intermittently operated by mechanism H to engage the film alternately with the film moving pins, in such a manner that the pilot pins engage the film perforations just before the film moving pins are withdrawn therefrom, and are withdrawn from the film just after the film moving pins again engage the film perforations, so that the film is always engaged by one or the other of the pairs of pins.

The drive shaft for the movement is indicated at 24 (see Fig. 6), journaled in a bearing 25 mounted in plate 12. Spaced forwardly of bearing 25, shaft 24 has an eccentric 26 around which is a strap 27 formed in the intermediate portion of an eccentric operated driving arm 30. The forwardly extending portion 31 of said arm 30 is in the form of a cylindrical slide rod which is taken within and guided by a pivoted slide-bearing block 32, the pivot of said block being afforded by a stud 33 formed thereon and rotatively mounted in a bracket 34 mounted on plate 12. Rotation of eccentric 26 causes arm 30 to slide longitudinally in bearing block 32 and to oscillate on the axis of stud 33. It may here be mentioned that an eccentric 26 is here shown for the operation of arm 30 rather than a cam because it gives the circular arc motion later to be described, although in some cases a cam might be used.

Pivoted to arm 30 rearwardly of eccentric 26 is the rearward end of claw arm 18, the claw arm for this purpose being provided with a stud 36 rotatably mounted in arm 30. Claw arm 18 is held against separative movement from driving arm 30 by means of the enlarged head of a screw 37 set into the end of stud 36 while a flange 38 formed on drive shaft 24 outside of eccentric 26 serves properly to space the claw arm from arm 30.

Figure 7 is a single line diagram of the movement, showing the generation of the paths of points on arm 30 and the claw arm. The circle *e* is the circle of eccentricity of eccentric 26, or in other words the circle of the equivalent crank. It will be noticed that the point on arm 30 to which the rear end of the claw arm is pivoted, is moved in the path of a kind of ellipse, whose major axis is pendicular to the center line of the movement.

Thus eccentric 26 operates arm 30 to move the rear end of the claw arm in the elliptic path

described, the major axis of the ellipse representing the transverse movement of the claw arm obtained from arm 30, and the minor axis of the ellipse representing the total longitudinal movement of the claw arm. A slide pivot guide is then provided for the claw arm forwardly of its connection with arm 30, and this provision is here in the form of a pivot stud 40 on the outer end of drive shaft 24, the claw arm being formed intermediate its ends with a longitudinal guide slot 41 within which said stud 40 is taken. If desired, a bearing sleeve 42 may be provided on stud 40 to slide on the surfaces of slot 41. In the preferred, form here illustrated, pivot stud 40 is located somewhat eccentrically with reference to the axis of shaft 24, the directions of eccentricity of eccentric 26 and pivot 40 being diametrically opposed, which arrangement results in improved operating characteristics, as to be more fully set forth hereinafter. Thus in the preferred embodiment pivot 40 is a crank pin or eccentric, although in certain aspects of the invention it need be only a pivot on which the claw arm may slide.

The complete operation of the claw arm in initially engaging the film, moving the film through the pull-down distance, and finally withdrawing from the film and returning to the first position, may now be understood. To move the film downwardly, drive shaft 24 is rotated in a right-handed direction as viewed in the drawings. This causes driving arm 30 to move the rear end of the claw arm right-handedly in the elliptic path described. The claw arm then slides and pivots on the stud or pin 40, and the claw pins on its forward end describe a motion path as illustrated at *m*. The effect of placing the slide pivot pin 40 eccentric with reference the drive shaft 24, and 180 degrees opposed to eccentric 26, may be understood by analyzing the position of the claw arm pivot 36 upwardly on its elliptic path would immediately cause the claw arm to swing on its pivot to start its forward, film-engaging end immediately downwardly; but in the instant case, as the claw arm pivot 36 starts to rise in its elliptic path from the position indicated in Fig. 7, the right-handedly rotating slide pivot pin 40 moves a short distance rearwardly on the claw arm, in such a manner as to compensate the initial rise of the rearward end of the claw arm, which would otherwise start the forward end of the claw arm immediately downward. Thus, in final effect, the downward "pull-down" swing of the claw arm is delayed slightly, which gives the claw pins time to move more fully into the film perforations before the pull-down swing starts, and thereby reduces "sawing" of the pins on the film during the pull-down, as well as retarding somewhat the initial downward accelleration of the claw-arm.

Thus the claw arm may be considered to be reciprocated and oscillated from its rearward end by its elliptically moving pivot connection with the driving arm 30, the eccentricity of its slide pivot pin 40 serving in the manner described to improve the motion characteristics of the claw arm. This eccentricity also has the effect of lengthening the pull-down stroke, which means, for a standard pull-down distance, a desirable shortening of the claw arm.

It will be noticed from Fig. 7 that the path of a point *r* on the arm 30 located a certain distance to the right of claw arm pivot 36 has a nearly perfect circular arc path *c* during the down stroke of said arm (upstroke of the claw arm). A link or arm 50 is pivotally connected at one of its ends to arm 30 at said point *r*, as by means of a stud 51 set into arm 30 at point *r* (see Fig. 6). The other end of arm 50, at a distance from point *r* equal to the radius of the circular arc path *c* of said point, is provided with a pivotal connection 52 to motion transmitting means operating the registering mechanism H, in the present case being connected to the lower arm of a lever 53 which is pivotally mounted on wall 12, as at 54. Lever 53 is arranged in such a manner that the pivotal connection 52 of its lower arm with arm 51 swings to a position at the center of the circular arc path *c* of point *r* when point *r* is traversing said path *c*.

The upper arm of lever 53 is bifurcated, as at 55, to straddle an eccentric 56 on a stud 57 which is mounted for rotative adjustment in bore extending transversely through a horizontally disposed register pin carrying member 58. This member 58 is mounted at its rearward end in a slide bearing 59 so as to be capable of reciprocation towards and away from the film race, and its forward end carries a cross-arm 60 from the opposite end of which extend studs 61 carrying the register pins 20, the reciprocation of member 58 causing said pins 20 intermittently to engage the film in the film race.

During the down stroke of driving arm 30, which corresponds to the up or return stroke of claw arm 18, the pivotal connection point *r* of arm 30 with arm 50 thus travels in the arc of a circle, the center of which coincides with the pivotal connection of the other end of arm 50 with the lower end of lever 53. Therefore, during this phase of movement, arm 50 simply pivots about its connection with lever 53 as a center and no motion is imparted to lever 53 and hence through member 58 to the register pins 20, which are then in stationary engagement with the film (see Fig. 2). As the driving arm 30 finally reaches the lower limit of its down stroke, and the claw arm simultaneously reaches the upper limit of its return stroke and moves into engagement with the film, however, the pivotal connection point *r* of arm 30 with arm 50 departs from its circular arc back-stroke path and moves forwardly towards the film to follow its inner, upstroke path, thereby bodily moving arm 50 forwardly to cause a movement of lever 53 which retracts member 58 to withdraw the register pins 20 from the film. The pivotal connection between arm 50 and lever 53 follows the loci indicated for the duration of the claw arm pull-down stroke, maintaining the register pins out of engagement with the film until the claw arm reaches the lower limit of its down stroke and starts to withdraw from the film. At that time the pivotal connection *r* of arm 30 with arm 50 is moving rearwardly to reach the upper end of its circular arc return-stroke path *c*, and in so doing moves arm 50 to bring its pivotal connection with lever 53 back to its locus at the center of that circular arc path. This operation brings lever 53 again to the position in which the member 58 operated thereby is in forward position with its register pins in engagement with the

film. While arm 50 then swings downwardly with arm 30, the pivotal connection of said arm with lever 53 then again remains stationary to hold the register pin mechanism in stationary engagement with the film, as previously described.

Thus the effect of these provisions is that the register pins are operated to engage the film just before the claw pins are withdrawn therefrom, and remain in stationary engagement with the film while the claw arm is moving upwardly on its return stroke, being moved to withdraw from the film just after the claw pins again engage the film.

It will be noticed that the film is normally always engaged either by the claw pins or the register pins. To thread the movement, knurled thumb piece 66 on the forward end of eccentric stud 57 is operated to rotate eccentric 56 between the bifurcations 55 of lever 53, in such a manner as to cause movement of stud 57 rearwardly. This operation causes retraction of member 58 to withdraw the register pins from the film. Both the claw and the register pins are then withdrawn from the film race (see Fig. 4), and the movement can be threaded, after which return rotation of thumb piece 66 brings the movement back to the operative position shown in Fig. 2. Stud 57 is mounted in member 58 with a nice turning fit, so that it can be easily rotated manually, but with sufficient tightness that it will maintain its position during operation of the movement.

It will be understood that various changes in design, structure and arrangement may be made in the movement without departing from the spirit and scope of the claims appended hereto. And in this connection it may be mentioned that in the claims the expression eccentric is used in a generic sense to include within its purview all such fundamentally similar elements as eccentrics, cranks or rotational cams, any one of which might be used in a specific design for the operation of the movement.

I claim:—

1. In a film movement, the combination of a frame providing a film guideway, a rotatable drive shaft journalled in said frame rearwardly of said guideway, an eccentric on said drive shaft, an oscillatory arm operated intermediate its ends by said eccentric, a slide-pivot guide between said eccentric and said guideway for the forward end of said oscillatory arm, a claw arm pivotally connected at its rearward end to said oscillatory arm at a point thereon rearwardly of said eccentric, in such a manner that the rearward end of the claw arm is moved in an elliptical path, and a slide-pivot guide means for an intermediate portion of said claw-arm located directly opposite said drive shaft.

2. In a film movement, the combination of a frame providing a film guideway, a rotatable drive shaft journalled in said frame rearwardly of said guideway, an eccentric on said drive shaft, an oscillatory arm operated by said eccentric, a slide-pivot guide between said eccentric and said guideway for the forward end of said oscillatory arm, a claw arm pivotally connected at its rearward end to said oscillatory arm, and another eccentric on said drive shaft, the intermediate portion of said claw arm being adapted to slide longitudinally and to pivot on said last mentioned eccentric.

3. In a film movement, the combination of a frame providing a film guideway, a rotatable drive shaft journalled in said frame rearwardly of said guideway, an eccentric on said drive shaft, an oscillatory arm operated by said eccentric, a slide-pivot guide between said eccentric and said guideway for the forward end of said oscillatory arm, a claw arm pivotally connected at its rearward end to said oscillatory arm, and another eccentric on said drive shaft opposed by 180° to the first mentioned eccentric, the intermediate portion of said claw arm being adapted to slide longitudinally and to pivot on said last mentioned eccentric.

4. In a film movement, the combination of a frame providing a film guideway, a rotatable drive shaft journalled in the said frame rearwardly of said guideway, an eccentric on said drive shaft, an oscillatory arm operated intermediate its ends by said eccentric a slide-pivot guide between said eccentric and said guideway for the forward end of said oscillatory arm, a claw arm pivotally connected at its rearward end to said oscillatory arm at a point thereon rearwardly of said eccentric, in such a manner that the rearward end of the claw arm is moved in an elliptical path, and another eccentric on said drave shaft, the intermediate portion of said claw arm being adapted to slide longitudinally and to pivot on said last mentioned eccentric.

5. In a film movement, the combination of a frame providing a film guideway, a rotatable drive shaft journalled in said frame rearwardly of said guideway, an eccentric on said drive shaft, an oscillatory arm operated intermediate its ends by said eccentric, a slide-pivot guide between said eccentric and said guideway for the forward end of said oscillatory arm, a claw arm pivotally connected at its rearward end to said oscillatory arm at a point thereon rearwardly of said eccentric, in such a manner that the rearward end of the claw arm is moved in an elliptical path, and another eccentric on said drive shaft, opposed by 180° to the first mentioned eccentric, the intermediate portion of said claw arm being adapted to slide longitudinally and to pivot on said last mentioned eccentric.

6. In a film movement, the combination of a frame providing a film guideway, a rotatable drive shaft journalled in said frame, an eccentric on said drive shaft, an oscillatory arm operated by said eccentric, and a slide-pivot guide for one end of said arm, all in such manner that a point on said arm moves alternately in a substantially circular arc path and in a path out of said circular arc, a claw arm operatively connected to said oscillatory arm to engage and pull down the film by virtue of the motion of the oscillatory arm while said point is out of said circular arc path, and to disengage the film and return by virtue of the motion of said arm while said point is in said circular arc path, a film holding member adapted for engagement with the film alternately with the claw arm, and motion transmitting means between said oscillatory arm and said film holding member, said motion transmitting means including a member pivotally connected to said oscillatory arm at said point of circular arc motion and having another pivotal connection lying substantially at the center of said circular arc.

7. In a film movement, the combination of a frame providing a film guideway, a rotatable drive shaft journalled in said frame rearwardly of said guideway, an eccentric on said drive shaft, an oscillatory arm operated intermediate

its ends by said eccentric, and a slide pivot guide for the forward end of said arm, all in such manner that a point on the rearward end of said arm moves alternately in a substantially circular arc path and in a path out of said circular arc, a claw arm operatively connected to said oscillatory arm to engage and pull down the film by virtue of the motion of the oscillatory arm while said point is out of said circular arc path, and to disengage the film and return by virtue of the motion of said arm while said point is in said circular arc path, a film holding member adapted for engagement with the film alternately with the claw arm, and motion transmitting means between said oscillatory arm and said film holding member, said motion transmitting means including a member pivotally connected to said oscillatory arm at said point of circular arc motion and having another pivotal connection lying substantially at the center of said circular arc.

8. In a film movement, the combination of a frame providing a film guideway, a rotatable drive shaft journalled in said frame rearwardly of said guideway, an eccentric on said drive shaft, an oscillatory arm operated intermediate its ends by said eccentric, and a slide pivot guide for the forward end of said arm, all in such manner that a point on the rearward end of said arm moves alternately in a substantially circular arc path and in a path out of said circular arc, a claw arm pivoted at its rearward end to said oscillatory arm at a point to the rear of said eccentric, a slide-pivot guide for an intermediate portion of said claw arm, whereby said claw arm is operated by the oscillatory arm to engage and pull down the film during the motion of said oscillatory arm while its point of circular arc motion is out of said circular arc, and to disengage the film and return during the motion of said oscillatory arm while said point is traversing said circular arc, a film holding member adapted for engagement with the film alternately with the claw arm, and motion transmitting means between said oscillatory arm and said film holding member, said motion transmitting means including a member pivotally connected to said oscillatory arm at said point of circular arc motion and having another pivotal connection lying substantially at the center of said circular arc.

9. In a film movement, the combination of a frame providing a film guideway, a rotatable drive shaft journalled in said frame rearwardly of said guideway, an eccentric on said drive shaft, an oscillatory arm operated intermediate its ends by said eccentric, and a slide pivot guide for the forward end of said arm, all in such manner that a point on the rearward end of said arm moves alternately in a substantially circular arc path and in a path out of said circular arc, a claw arm pivoted at its rearward end to said oscillatory arm at a point to the rear of said eccentric, a second eccentric on said shaft on which the intermediate portion of the claw arm slides and pivots, whereby said claw arm is operated by the oscillatory arm to engage and pull down the film during the motion of said oscillatory arm while its point of circular arc motion is out of said circular arc, and to disengage the film and return during the motion of said oscillatory arm while said point is traversing said circular arc, a film holding member adapted for engagement with the film alternately with the claw arm, and motion transmitting means between said oscillatory arm and said film holding member, said motion transmitting means including a member pivotally connected to said oscillatory arm at said point of circular arc motion and having another pivotal connection lying substantially at the center of said circular arc.

10. In a film movement, the combination of a frame providing a film guideway, a rotatable drive shaft journalled in said frame, an eccentric on said drive shaft, an oscillatory arm operated by said eccentric, and a slide-pivot guide for one end of said arm, all in such manner that a point on said arm moves alternately in a substantially circular arc path and in a path out of said circular arc, a claw arm operatively connected to said oscillatory arm to engage and pull down the film by virtue of the motion of the oscillatory arm while said point is out of said circular arc path, and to disengage the film and return by virtue of the motion of said arm while said point is in said circular arc path, a film holding member adapted for engagement with the film alternately with the claw arm, and operative interconnecting means between said film holding member and said oscillatory arm, said means including a movable motion transmitting element having a connection pivot whose loci include a locus substantially at the center of said circular arc, and a connecting member pivotally connected to the oscillatory arm at said point of circular arc motion, and, at a distance equal to the radius of said circular arc, connected with the connection pivot of said motion transmitting element.

11. In a film movement, the combination of a frame providing a film guideway, a rotatable drive shaft journalled in said frame rearwardly of said guideway, an eccentric on said drive shaft, an oscillatory arm operated intermediate its ends by said eccentric, and a slide pivot guide for the forward end of said arm, all in such manner that a point on the rearward end of said arm moves alternately in a substantially circular arc path and in a path out of said circular arc, a claw arm operatively connected to said oscillatory arm to engage and pull down the film by virtue of the motion of the oscillatory arm while said point is out of said circular arc path, and to disengage the film and return by virtue of the motion of said arm while said point is in said circular arc path, a film holding member adapted for engagement with the film alternately with the claw arm, and operative interconnecting means between said film holding member and said oscillatory arm, said means including a movable motion transmitting element having a connection pivot whose loci include a locus substantially at the center of said circular arc, and a connecting member pivotally connected to the oscillatory arm at said point of circular arc motion and, at a distance equal to the radius of said circular arc, connected with the connection pivot of said motion transmitting element.

12. In a film movement, the combination of a frame providing a film guideway, a rotatable drive shaft journalled in said frame rearwardly of said guideway, an eccentric on said drive shaft, an oscillatory arm operated intermediate its ends by said eccentric, and a slide pivot guide for the forward end of said arm, all in such manner that a point on the rearward end of said arm moves alternately in a substantially circular arc path and in a path out of said circular arc, a claw arm pivoted at its rearward end to

said oscillatory arm at a point to the rear of said eccentric, a slide-pivot guide for an intermediate portion of said claw arm, whereby said claw arm is operated by the oscillatory arm to engage and pull down the film during the motion of said oscillatory arm while its point of circular arc motion is out of said circular arc, and to disengage the film and return during the motion of said oscillatory arm while said point is traversing said circular arc, a film holding member adapted for engagement with the film alternately with the claw arm, and operative interconnecting means between said film holding member and said oscillatory arm, said means including a movable motion transmitting element having a connection pivot whose loci include a locus substantially at the center of said circular arc, and a connecting member pivotally connected to the oscillatory arm at said point of circular arc motion and, at a distance equal to the radius of said circular arc, connected with the connection pivot of said motion transmitting element.

GEORGE A. MITCHELL.

Aug. 3, 1937. G. A. MITCHELL 2,088,714

SOUND INSULATED MOTION PICTURE CAMERA

Original Filed May 7, 1934 11 Sheets-Sheet 1

Fig. 1

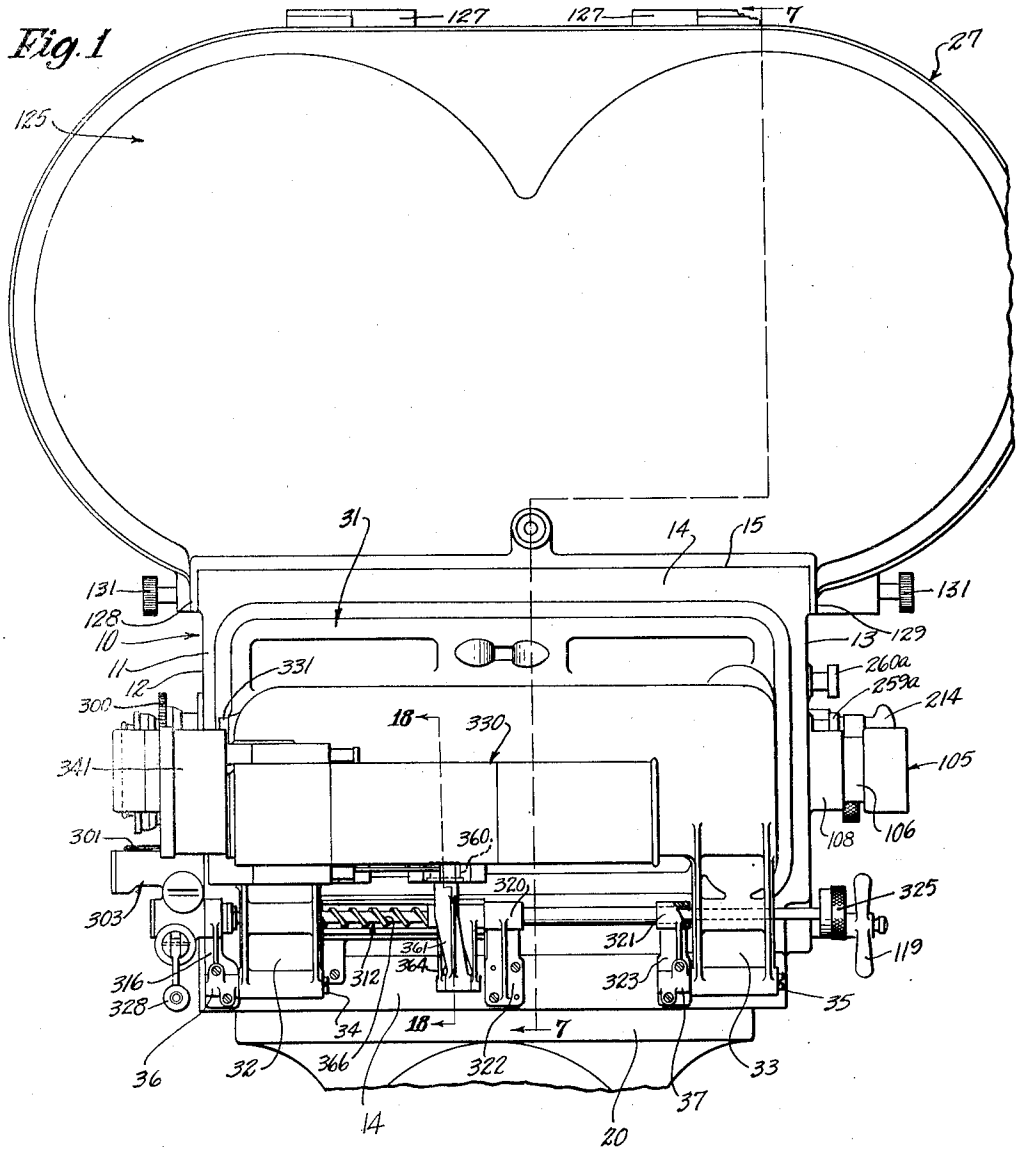

Inventor
George A. Mitchell.

Attorney

SOUND INSULATED MOTION PICTURE CAMERA

Original Filed May 7, 1934 11 Sheets-Sheet 2

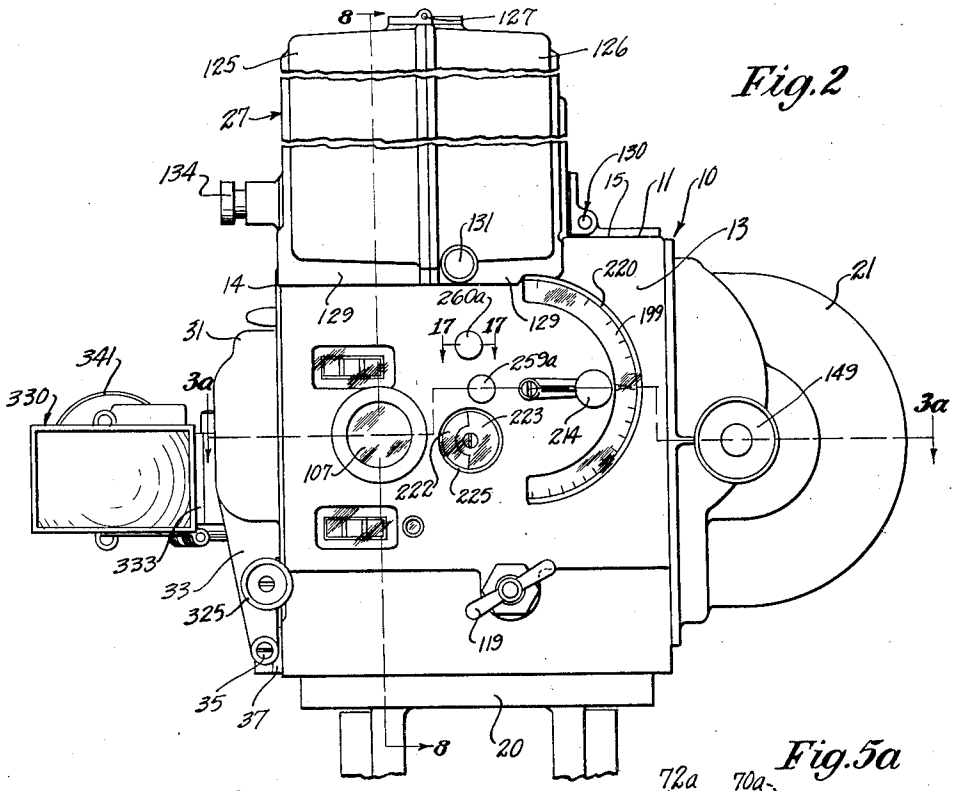

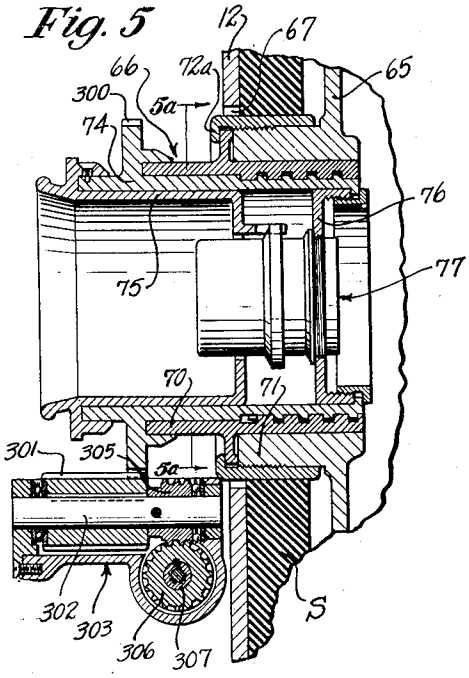

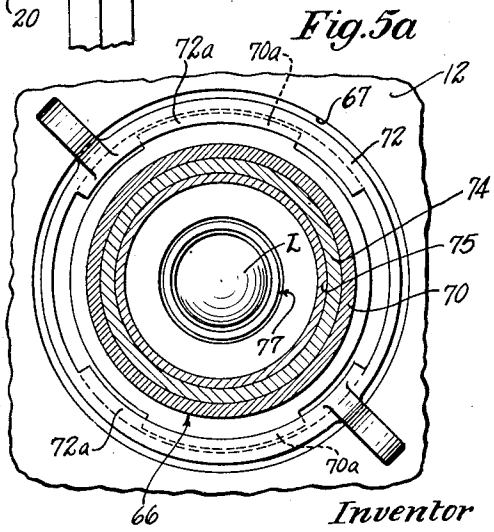

Inventor
George A. Mitchell.

Attorney.

Aug. 3, 1937. G. A. MITCHELL 2,088,714

SOUND INSULATED MOTION PICTURE CAMERA

Original Filed May 7, 1934 11 Sheets-Sheet 3

Fig. 3

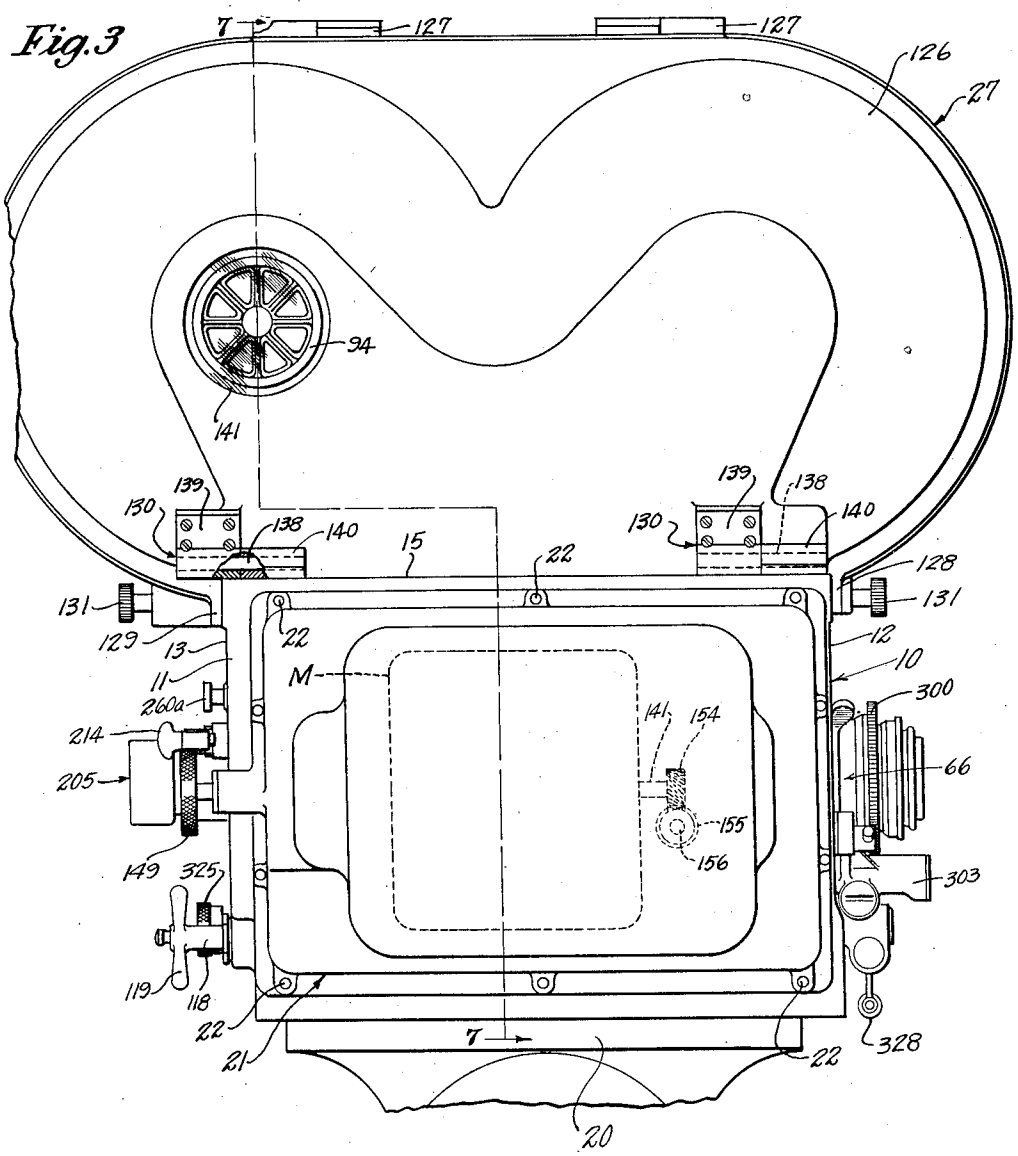

Inventor
George A. Mitchell.

Attorney.

SOUND INSULATED MOTION PICTURE CAMERA

Original Filed May 7, 1934 11 Sheets-Sheet 4

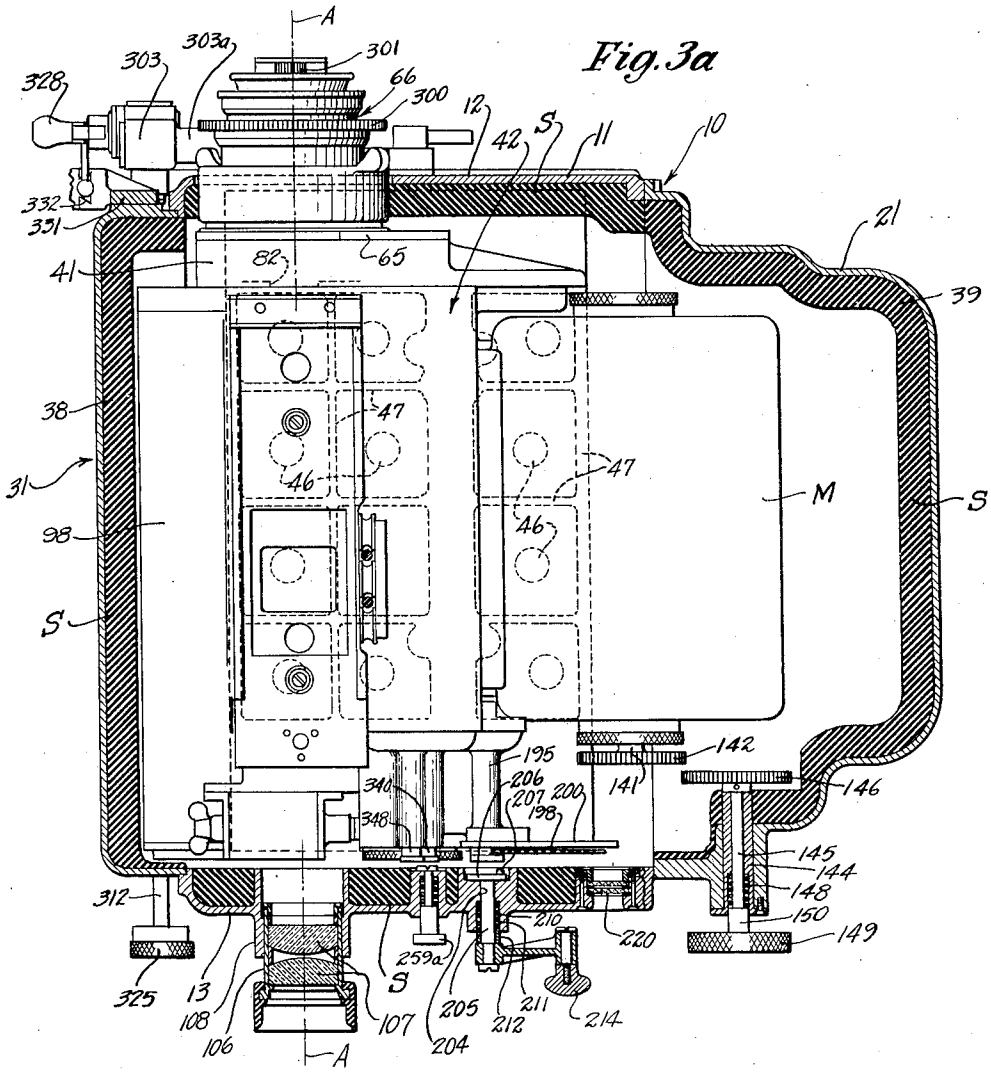

Inventor
George A. Mitchell.

Attorney.

Aug. 3, 1937. G. A. MITCHELL 2,088,714

SOUND INSULATED MOTION PICTURE CAMERA

Original Filed May 7, 1934 11 Sheets-Sheet 5

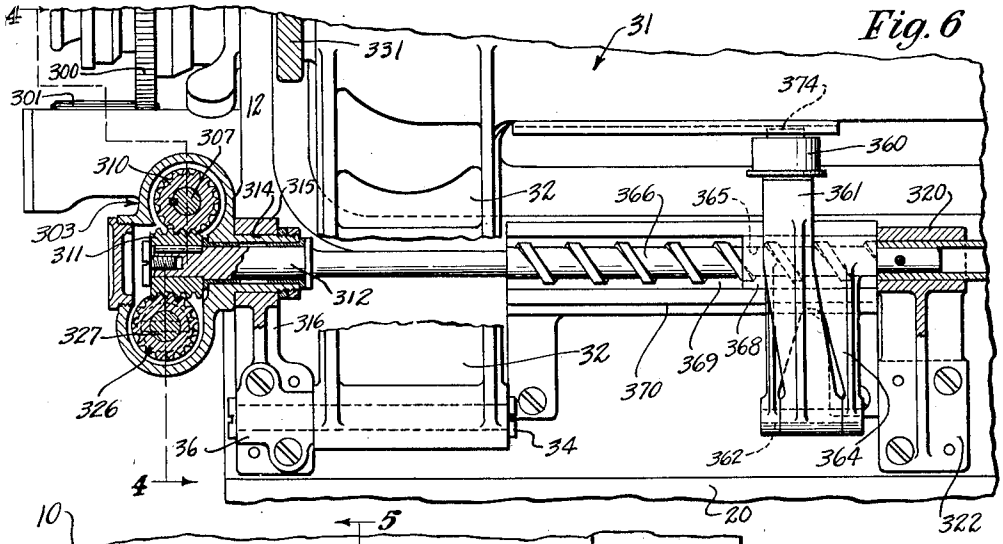

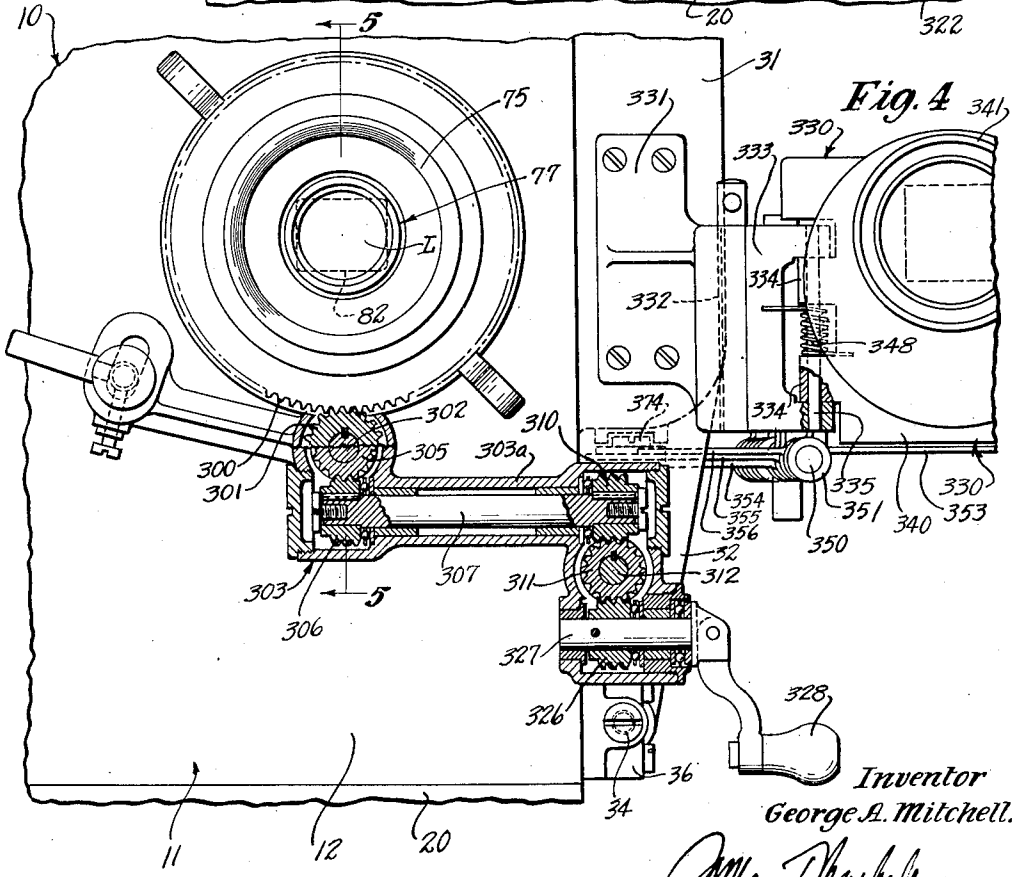

Inventor
George A. Mitchell.

Attorney.

SOUND INSULATED MOTION PICTURE CAMERA

Original Filed May 7, 1934 11 Sheets-Sheet 6

Fig. 7

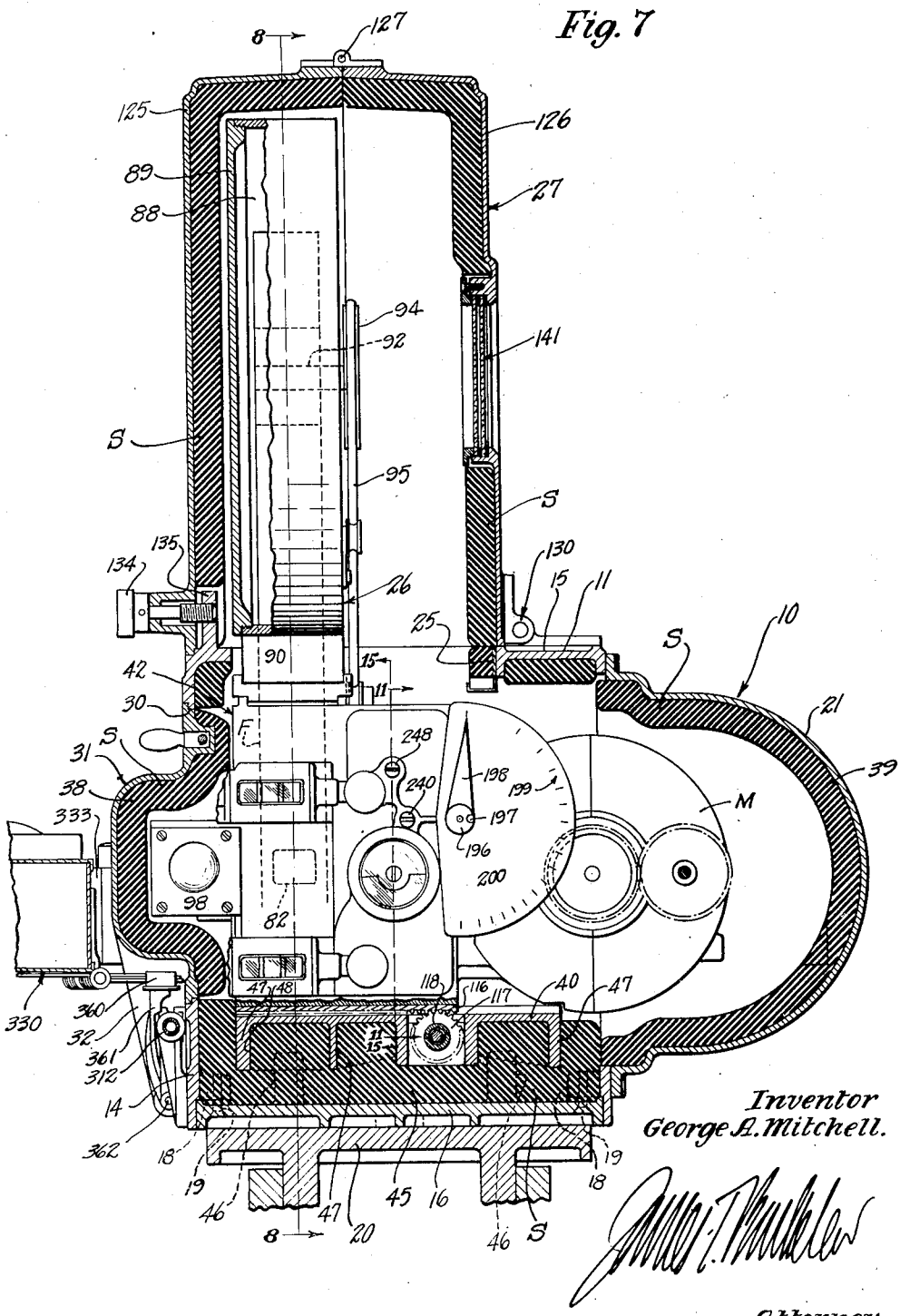

SOUND INSULATED MOTION PICTURE CAMERA

Original Filed May 7, 1934 11 Sheets-Sheet 7

Fig. 8

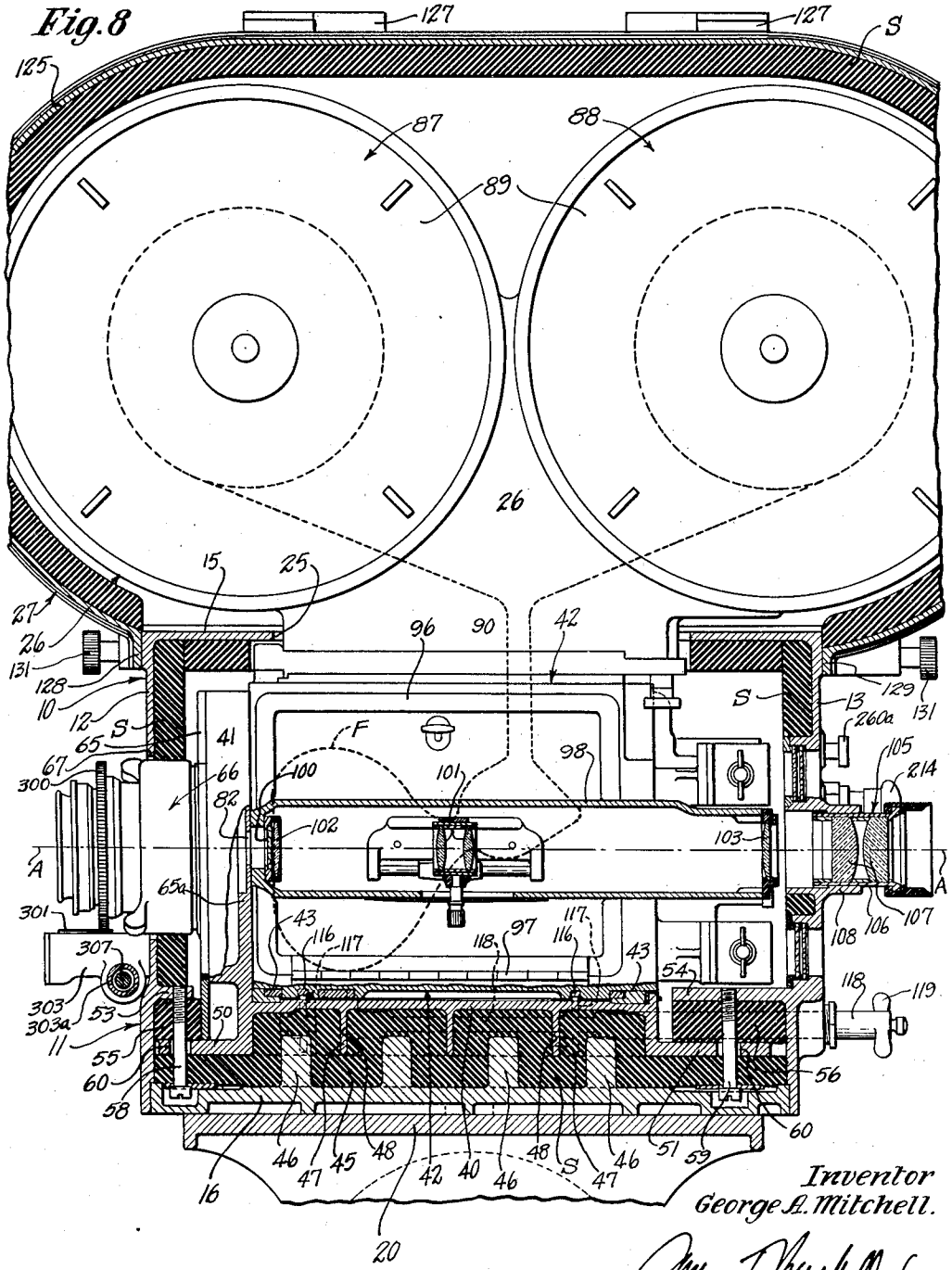

Inventor
George A. Mitchell.

Attorney.

SOUND INSULATED MOTION PICTURE CAMERA

Original Filed May 7, 1934 11 Sheets-Sheet 8

Fig. 9

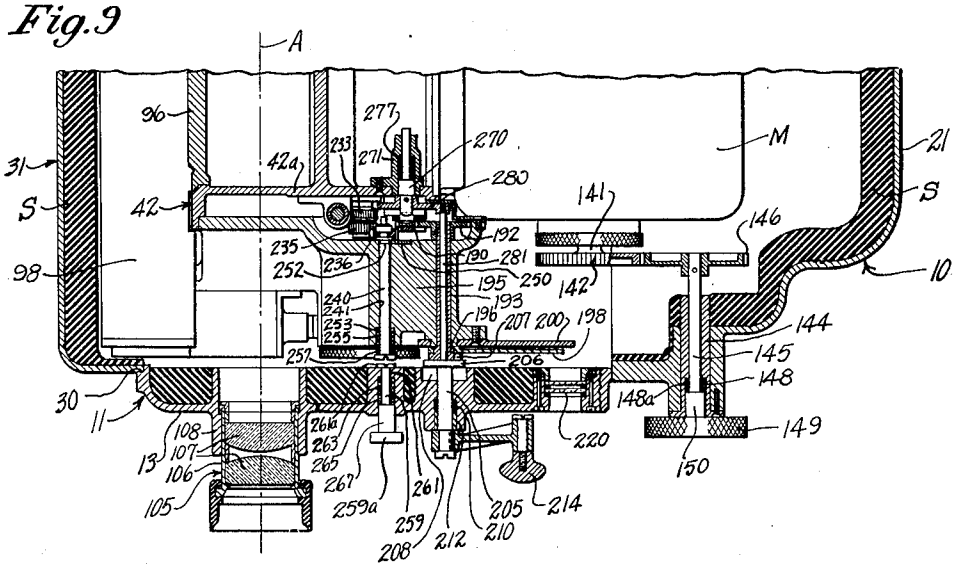

Fig. 10

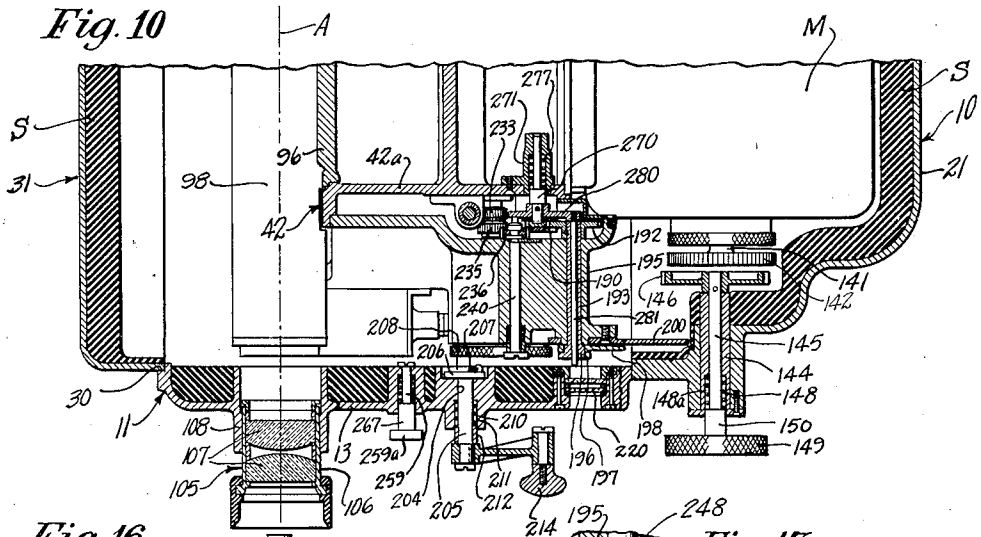

Fig. 16

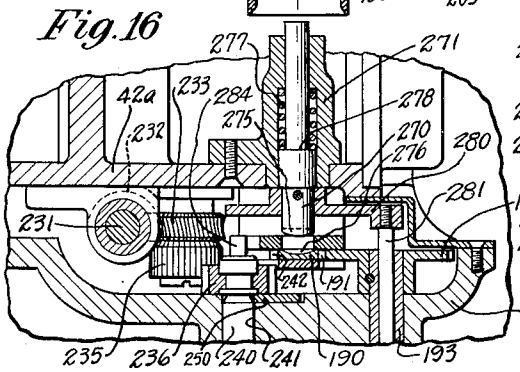

Fig. 17

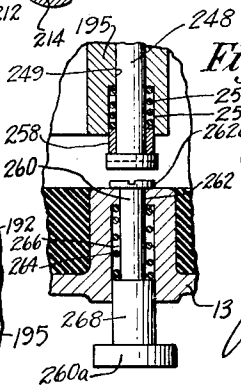

Inventor
George A. Mitchell.

Attorney.

SOUND INSULATED MOTION PICTURE CAMERA

Original Filed May 7, 1934 11 Sheets-Sheet 9

Fig. 12

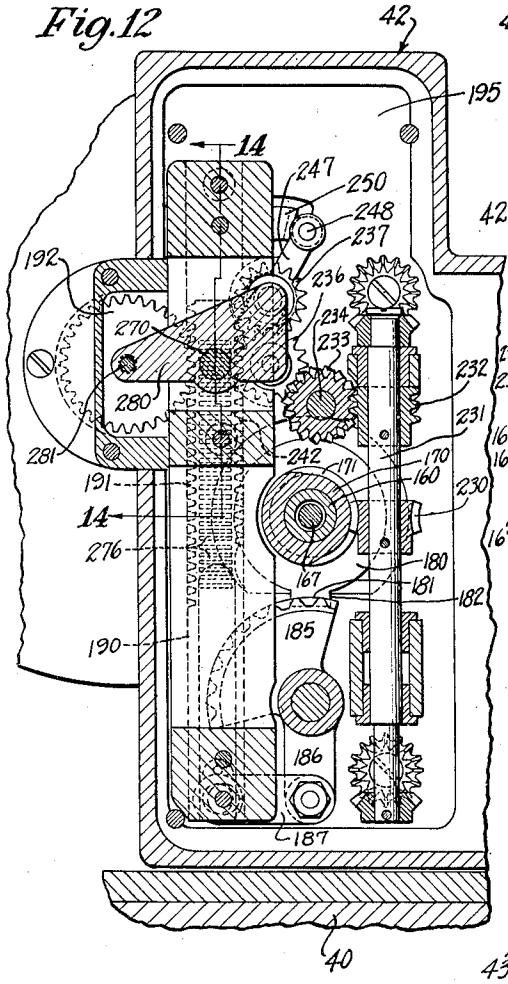

Fig. 11

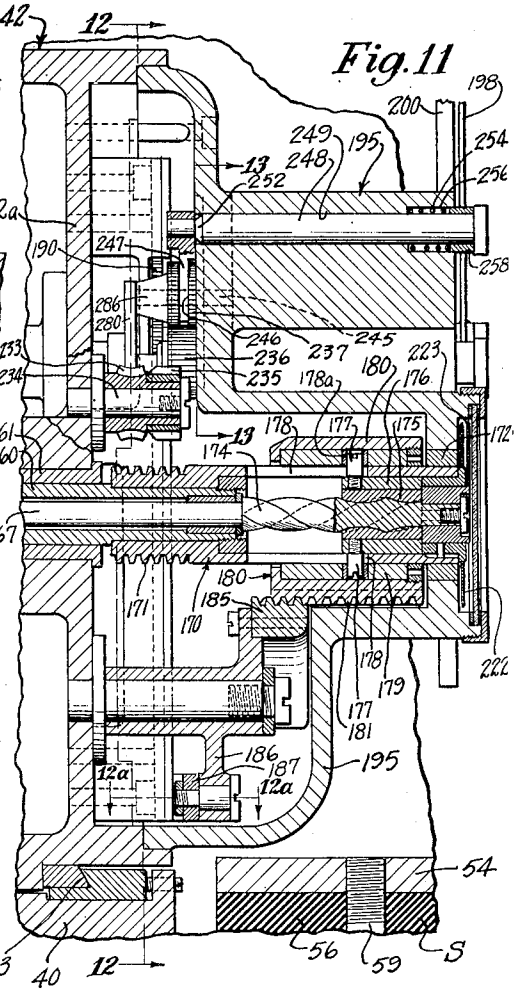

Fig. 13

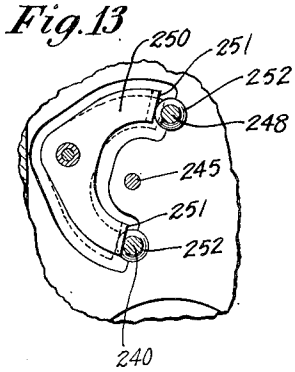

Fig. 14

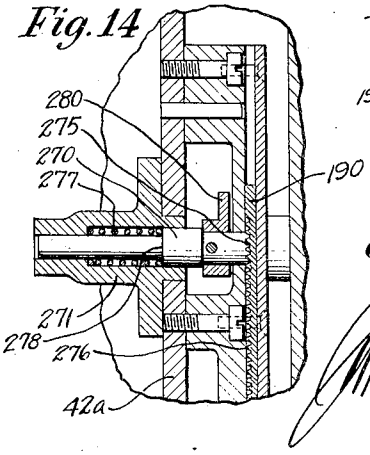

Fig. 12a

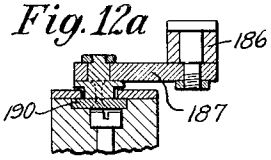

Inventor
George A. Mitchell.

Attorney.

SOUND INSULATED MOTION PICTURE CAMERA

Original Filed May 7, 1934 11 Sheets-Sheet 10

Fig. 15

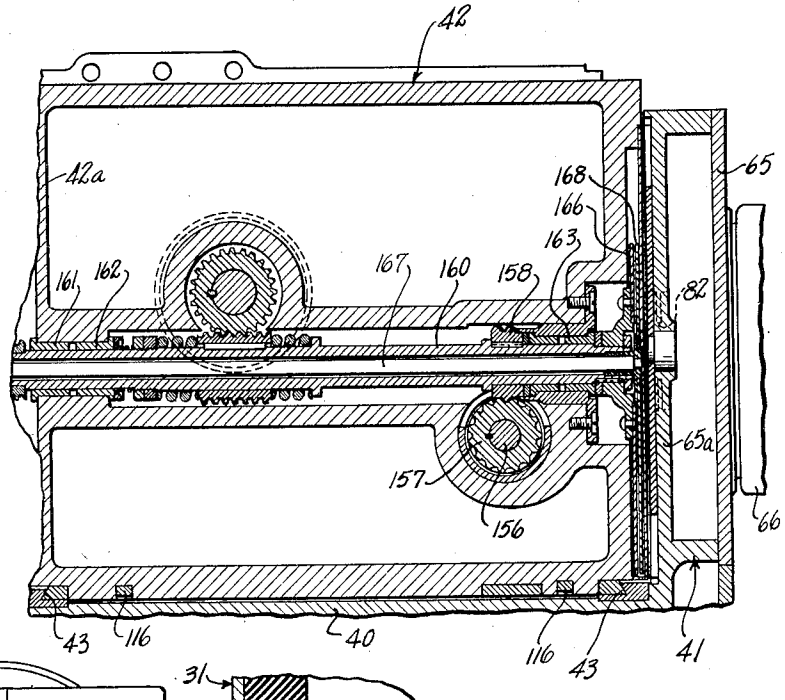

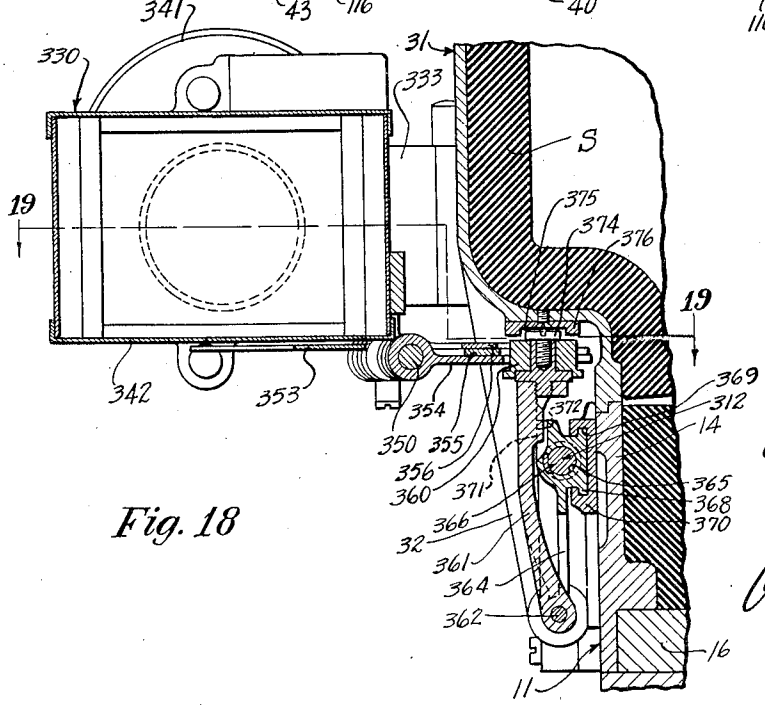

Fig. 18

Inventor
George A. Mitchell.

Attorney.

SOUND INSULATED MOTION PICTURE CAMERA

Original Filed May 7, 1934 11 Sheets-Sheet 11

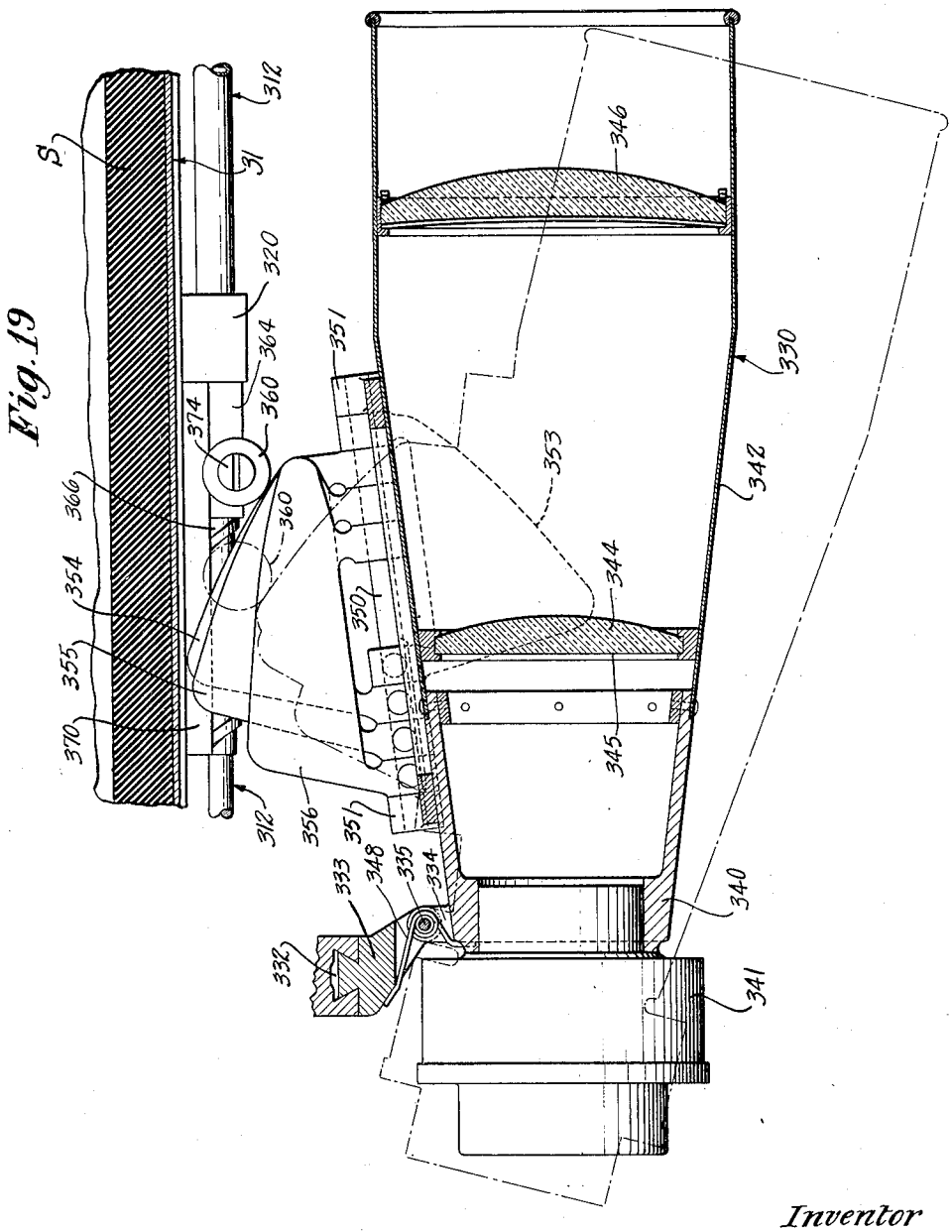

Inventor
George A. Mitchell.

Attorney.

Patented Aug. 3, 1937 2,088,714

UNITED STATES PATENT OFFICE

2,088,714

SOUND INSULATED MOTION PICTURE CAMERA

George A. Mitchell, Los Angeles, Calif., assignor to Mitchell Camera Corporation, West Hollywood, Calif., a corporation of Delaware

Application May 7, 1934, Serial No. 724,351
Renewed April 23, 1937

4 Claims. (Cl. 88—16.2)

This invention relates generally to motion picture cameras, and it may be stated as a general object of the invention to provide a sound insulated motion picture camera.

Since the advent of sound pictures it has become essential to silence the motion picture camera, since camera noises are readily picked up and recorded by the sound recording equipment. Attempts have been made to meet the problem by devising quiet camera mechanisms to take the place of the comparatively noisy mechanisms heretofore used, but at the best so far achieved the camera still produces considerably more than an acceptable minimum of noise. Accordingly, it has been common practice to enclose the entire camera within a comparatively large sound proof box. Such sound proof boxes have sometimes constituted booths, sufficiently large enough for the cameramen to enter to operate the camera, and in other cases are simply large boxes adapted to surround the camera.

It is a primary object of the present invention to provide a more compact sound insulated motion picture camera, the sound insulation parts of which are constructed as a component part of the camera structure.

It is a further object of the invention to provide a sound insulated motion picture camera in which the various usual manual control devices as well as focusing and view finding devices extend through or are mounted on the exterior of the insulated camera case.

A further object of the invention is to provide a particularly effective sound insulation medium, and a desirable and effective means of applying it to a camera housing.

A further object of the invention is to provide a special sound proof housing with an improved means for quickly and easily gaining access to the camera mechanism, and also to the film magazine for the purpose of changing film, or for the purpose of entirely removing the film magazine.

Various additional objects will appear from the following detailed description of a present preferred embodiment of the invention as applied to a particular motion picture camera, which will now best be set forth without further preliminary discussion, reference for this purpose being had to the accompanying drawings, in which:

Fig. 1 is a side elevation of the sound insulated camera of the present invention;

Fig. 2 is a rear view of the camera seen in Fig. 1;

Fig. 3 is an elevation of the camera looking at the side opposite to that seen in Fig. 1;

Fig. 3*a* is a section taken on line 3*a*—3*a* of Fig. 2, but showing the interior camera mechanism in plan;

Fig. 4 is a view of a portion of the front end of the camera, being a view taken on line 4—4 of Fig. 6;

Fig. 5 is a section taken on line 5—5 of Fig. 4;

Fig. 5*a* is a section taken on line 5*a*—5*a* of Fig. 5;

Fig. 6 is a detailed view of a portion of the side of the camera, the view finder device being removed, and certain parts being broken away to expose underlying parts;

Fig. 7 is a section taken as indicated by the broken line 7—7 of Figs. 1 and 3, the interior camera box and magazine being shown in full elevation but with certain parts broken away;

Fig. 8 is a section taken as indicated by line 8—8 of Figs. 2 and 7;

Fig. 9 is a section taken as indicated by line 3*a*—3*a* of Fig. 2;

Fig. 10 is a view similar to that of Fig. 9 but showing the interior camera box moved to another position;

Fig. 11 is a sectional view taken as indicated by line 11—11 of Fig. 7;

Fig. 12 is a section taken on line 12—12 of Fig. 11;

Fig. 12*a* is a section taken on line 12*a*—12*a* of Fig. 11;

Fig. 13 is a section taken on line 13—13 of Fig. 11;

Fig. 14 is a section taken on line 14—14 of Fig. 12;

Fig. 15 is a section on the plane indicated by line 15—15 of Fig. 7;

Fig. 16 is an enlarged detail taken from Fig. 9;

Fig. 17 is a detail section taken on line 17—17 of Fig. 2;

Fig. 18 is a section taken on line 18—18 of Fig. 1; and

Fig. 19 is a section taken on line 19—19 of Fig. 18.

The present invention is here illustrated in connection with the Mitchell type of motion picture camera, to which certain features of the present invention particularly relate. It is a characteristic of the Mitchell camera that its film mechanism, including a focusing instrument, shifts laterally behind the photographic lens; and certain aspects of the invention relate to the sound proof enclosure of that shifting type of camera. It will be understood, however, that

this constitutes no limitation on certain other aspects of the invention, inasmuch as in certain aspects the invention is applicable to other types of cameras as well.

In the drawings, numeral 10 designates generally the exterior case of the sound insulated camera, this case comprising a box-like casting 11 including front and rear walls 12 and 13, respectively, vertical side wall 14, and top 15. A bed plate 16 closes the lower side of casing 11, engaging upwardly against lugs 18 within said casting and being fastened thereto by screws 19 (Figs. 7 and 8). This bed plate is adapted to rest on and be secured down to the head plate 20 of the tripod. The side of casting 11 opposite side 14 is closed by a removable side casting 21, shaped to fit around the camera motor M, and fastened in place by screws 22.

The top wall 15 of case 11 has a rectangular opening 25 through which extends the lower portion or throat of the usual camera magazine 26. A magazine compartment 27 is removably mounted on the top of case 11 around opening 25, and is of a size and shape to accommodate the camera magazine in two different positions, as will be more fully discussed hereinafter.

The side 14 of the housing is provided with an opening 30 (Fig. 7), which is closed by a downwardly swinging door 31, the latter provided with downwardly extending integrally formed arms 32 and 33 (Fig. 1) pivoted on pivot pins 34 and 35, respectively, which are respectively carried by mountings 36 and 37 affixed to side wall 14.

The entire case, swinging door, and magazine compartment, as thus described, is lined, except where certain parts project through the walls, with a layer of suitable sound insulating material S. This insulation may be of any suitable substance having the desired sound insulation qualities, although I prefer to form it as a molded layer of rubber, or rubber substitute, preferably of the same nature as those produced by sulphuretted oils. A well known example of such a material is ordinary "art gum". I have found that this substance may readily be molded into variously shaped forms adapted to fit the irregular conformations of the exterior camera case, and also that its sound insulation qualities are very marked, while at the same time deterioration of this material is negligible. Accordingly, a set of moldings is made of the chosen material, preferably of substantially uniform thickness, but of various outlines and shapes to fit accurately the inner surfaces of the various irregular walls of the case and magazine compartment. These individual moldings are cemented within the walls which they are formed to fit, such as typically indicated at 38 within housing door 31, and at 39 within side wall 21 (Fig. 7).

The operative motion picture camera mechanism, or camera proper, is mounted within this sound insulated case, which, as will subsequently appear, has been constructed of such a shape as to receive and closely conform to the outline of the camera mechanism, but to accommodate movement of certain components of the camera mechanism within the case.

The interior insulated camera structure will be seen (Figs. 8 and 15) to embody a horizontal base or bed plate 40, having rising from its forward end a vertical head portion 41, and a camera box or mechanism carrier 42 located to the rear of head 41 and arranged to slide transversely across bed 40 in ways 43. This box 42 carries all of the running gear of the camera.

Camera base 40 is supported on a molded insulation pad 45 of the described material, which rests on exterior housing bed plate 16. Bed plate 16 has spaced upwardly extending projections 46 which pad 45 is molded to fit (Figs. 7 and 8), this provision serving accurately to position the pad with reference to the housing, while camera base 40 has downwardly extending longitudinal and lateral ribs 47 forming squares around projections 46 (Fig. 3a) and adapted to be received within slots 48 molded in the upper side of the pad, as clearly shown. It will be obvious that this provision serves accurately to horizontally position the interior camera structure with reference to the exterior housing or case 10. The front and rear ends of base 40 have forwardly and rearwardly projecting supporting flanges 50 and 51, respectively, (Fig. 8) which rest down on pad 45, while the forward and rearward housing walls 12 and 13 have inwardly projecting flanges 53 and 54 which overlie plates 50 and 51, respectively. An insulation pad 55 is placed between 50 and 53, and an insulation pad 56 is placed between flanges 51 and 54, these pads being snugly fitted and serving to restrict the camera base against movement within case 10. Screws 58 and 59 at the front and rear pass upwardly through pad 45, extend through enlarged apertures 60 in flanges 50 and 51, and thence pass through pads 55 and 56 to screw thread into housing flanges 53 and 54, respectively. The heads of the screws, with washers, bear upwardly against pad 45, locally somewhat compressing it. These provisions serve accurately to position the interior camera structure and mechanism within the insulated housing, without the interior camera mechanism engaging in metal to metal contact with any metallic part of the housing.

The camera head 41 that rises from the forward end of base member 40 is hollow (Fig. 15) and houses certain mat devices, not necessary here to illustrate, and its forward side is closed by a plate 65 that carries the lens mount (see Figs. 5, 5a, 8 and 15). The camera here shown is of the type having a single photographic lens mount holder, which is adapted to removably receive lens mounts having lenses of different focal lengths, rather than of the other common type involving a rotatable lens turret carrying a plurality of lenses of various focal lengths; it will be obvious, however, that the present invention is adaptable to either type. The lens mount, generally designated at 66, is shown in Figs. 5 and 8 to be supported on wall 65 and to project through a circular opening 67 in housing wall 12 and the insulation pad immediately within that wall. The cylindrical outer barrel 70 of the lens mount is removably received within a supporting sleeve 71 formed integrally with the aforementioned wall 65, and is adapted to be removably clamped thereto through engagement of its lugs 70a by inwardly extending flange portions 72a of a clamping ring 72 screwthreaded on the exterior of sleeve 71 (Fig. 5a). Screwthreaded within barrel 70 is an inner barrel 74, while mounted within barrel 74 is a tube 75 and ring 76 which carry and position the lens tube assembly 77 which contains the photographic lens L and the usual iris, not shown. Rotation of barrel 74 causes said barrel and the photographic lens carried thereby to be screwed forwardly or rearwardly within outer barrel 70, and this op-

eration is utilized to focus the lens. The means effecting such rotation of barrel 74 for focusing purposes will be described at a later point in the specification.

Immediately to the rear of the photographic lens and in alinement therewith there is formed in head 41 the usual photographic aperture, as indicated at 82 in Figs. 4, 7, 8 and 15, this aperture extending through the rear wall 65a of the hollow head.

The camera box 42 carries on its top the usual film magazine 26, which is detachably mounted on said box in any suitable manner. The magazine shown is of conventional type, embodying compartments 87 and 88 for the feed and take-up film rolls, respectively, which compartments are provided with circular lids 89 screwthreaded therein (see Figs. 7 and 8), said lids being removable for the purpose of loading or unloading the magazine with film. Throat 90 of the magazine, through which the film passes in entering and leaving camera box 42, rests on and is detachably secured to camera box 42 in any usual or suitable manner, as indicated in Figs. 7 and 8. The aperture 25 formed in the top of the exterior camera housing is preferably of such size as just to pass magazine throat 90, as shown in Figs. 7 and 8. Within each magazine compartment is a film-spool receiving spindle 92, which is journalled in and extends through the rear side of the magazine. The spindle 92 within the rearward or film receiving compartment 88 has on its outer end a pulley 94 adapted to be driven by a belt 95. Such a magazine is well known and need not here be further described.

Camera box or carrier 42 is adapted to carry the usual film guide rollers, sprockets and intermittent film movement mechanism, for intermittently moving the film F downwardly past aperture 82, in the focal plane of photographic lens L, these parts all being well known and requiring no present illustration. The driving motor M for the camera mechanism is also mounted on this frame or carrier 42 that carries the film mechanism, and therefore shifts with it during the described transverse shift on bed 40.

For the purpose of gaining access to the interior of camera box 42, the side of the camera box adjacent housing door 36 is provided with a door 96 (Fig. 8), hinged along its lower edge, as at 97. This camera box door 96 may be opened after housing door 31 has been swung down.

Mounted on the outside of camera box door 96, at the level of photographic aperture 82, is a focusing tube 98. The forward end of this focusing tube comes closely adjacent the rear surface of camera head 41 when camera box 42 is moved to the right on bed 40 (viewing the camera from the rear), and by such movement the forward open end, or focusing aperture, of the focusing tube is brought into register with photographic aperture 82 in head 41 and thus into alinement with photographic lens L. This is the focusing position of the camera box and focusing tube, and is indicated in Fig. 10. The focusing tube here illustrated carries a ground glass 100 which is in the focal plane of the photographic lens, and, when the camera box and focusing tube have been moved to the position last mentioned, namely, with the focusing tube registered with the photographic aperture 82 and lens, this ground glass occupies the position normally taken by the film. The focusing tube has an objective combination 101, collector 102 immediately to the rear of ground glass 100, and, in the rear end of tube 95, a collector 103. The eye piece for the focusing tube is not mounted in the usual manner in the rear end of the tube, but is mounted in the rear wall 13 of the exterior insulated housing, and is permanently located in a position in optical alinement with aperture 82 and the photographic lens (see Figs. 3a, 8, 9 and 10, where A—A designates the axis of the lens). The eye piece here shown comprises a tube 106 carrying lens 107, which is mounted to slide forwardly and rearwardly for adjustment purposes in a supporting sleeve 108 formed integrally with wall 13.

The camera box position indicated in Figs. 7 and 9 is the "take" position, with the film F within the camera box alined with aperture 82 and the photographic lens. In this position the focusing tube 95 is received within a pocket 110 (see Fig. 7) formed in housing door 31, and is out of alinement with its eye piece 105. When the camera box is moved over in ways 43 to the focusing position, with the focusing tube alined with aperture 82 and with its eye piece 105 in wall 13 (Fig. 10), then the ground glass of the focusing tube occupies the position previously occupied by the film, and receives the photographic image which will be formed on the film when the camera box is subsequently returned to the "taking" position of Figs. 7 and 9. When the box and focusing tube are in focusing position (Fig. 10), the image on the ground glass may be viewed, magnified, through eye piece 105 and the focusing tube, and at this time the photographic lens may be focused until the image appears sharp on the ground glass. The camera box is then shifted back to the position of Figs. 7 and 9 for "taking" and the image is sharp on the film.

Thus the focusing device is by the present invention divided into two parts, first, a focusing tube carried by the transversely movable camera carrier or box, and registerable with the stationary aperture and photographic lens, and second, an eye piece mounted in the rear wall of the exterior housing in permanent optical alinement with said aperture and lens. This provision of a stationary focusing-tube eye piece in permanent optical alinement with the photographic aperture permits the use of a tightly closed, insulated, exterior case about the shifting camera mechanism carrier and focusing tube.

For the purpose of shifting the camera box between the taking and focusing positions described, the underside of said box is provided with a pair of racks 116, with which mesh spur gears 117 which are mounted on a shaft 118 that extends outwardly through the rear wall 13 of the exterior housing, and has on its outer end an operating handle 119 (see Figs. 7 and 8). Rotation of this handle 119 causes gears 117 to act through racks 116 to shift the camera box from one position to the other.

As will be evident from Fig. 7, the magazine compartment 27 of the exterior housing is made of sufficient width to accommodate the magazine 26 mounted on the movable camera box 42 in both of the described positions of the camera box. Compartment 27 is divided longitudinally into two halves, 125 and 126, hinged together at the top, as at 127 (Fig. 7). The two halves rest down on top wall 15 of housing 11, and at their forward and rearward ends have downward flanges 128 and 129 (Fig. 8) which fit over the ends of said housing, in the manner clearly

shown. Compartment half 126 is provided on its outer side with a hinged mounting 130 (Fig. 7) on housing top wall 15, and is secured down by means of screws 131 which pass through its projections 128 and 129 to screwthread into the adjacent walls of housing 11 (Fig. 8). The other compartment half 125 is provided on its side with a clamping screw 134 adapted to screwthread into an apertured lug 135 extending upwardly from housing wall 15.

When it is desired to change film in the magazine, screw 134 is loosened and compartment half 125 swung upwardly about its hinged connection 127 with the other compartment half 126. Magazine lids 89 may then be removed and the film changed. In case it is desired to remove magazine 26 from the camera, screws 131 are also loosened and compartment half 126 swung downwardly on its hinged mounting 130. This permits the belt 95 on the rear side of the magazine to be reached and removed and the magazine to be demounted in the usual manner. The hinged mounting 130 connecting compartment half 126 with housing wall 15 is here shown (Fig. 3) to embody a pair of hinge pins 138 rigidly supported by and projecting forwardly from mountings 139 affixed to the side wall of member 126, and corresponding bearings 140 for said pins mounted on top of wall 15. By swinging compartment half 126 to the right, as viewed from the rear of the camera, until its projections 128 and 129 clear the upper side of housing 11, the entire magazine compartment 27 may be removed from housing 11 by pulling it rearwardly until pins 138 disengage from bearings 140.

The side wall of magazine compartment half 126 is shown provided with a double-glass walled window 141 immediately opposite take-up reel pulley 94. The operation of the film take-up can be observed through this window.

The camera motor is designated at M, its housing being affixed to the side of camera box or carrier 42 (Figs. 7, 9 and 10). The camera motor accordingly shifts with the transverse movement of the carrier, and its two positions are shown in Figs. 9 and 10. Means are provided for manually rotating this camera motor from outside the camera housing, this means being operative, however, only when camera box 42 is in the "take" position. Journaled in a bearing 144 mounted in the rear end of side casting 21 is a motor operating shaft 145, having on its inner end a gear 146 which is adapted to be meshed with a gear 142 on motor shaft 141 when the camera box and the motor M are in the "taking" position of Fig. 9. Gear 146 may be moved into mesh with gear 142, when the parts are in that position, by moving shaft 145 inwardly through bearing 144 against a coil spring 148, spring 148 being placed around shaft 145 with in a counterbore 148a in bearing 144, and acting against a collar 150 on shaft 145 to move the shaft in an outward direction. For the purpose of convenient operation of shaft 145, an operating knob 149 is mounted on its outer end. Shaft 145 and gear 146 thus normally take the extended position of Fig. 10, out of mesh with and entirely clearing gear 142. Gear 146 being in the position of Fig. 10, the camera box may be shifted over to focusing position without interference between gears 146 and 142, as will be obvious from Fig. 10. And when the camera box is in "taking" position (Fig. 9), knob 149 may be moved inwardly to engage gear 146 with gear 142, and may then be turned to manually rotate the motor shaft and thus to move the film. The motor is permanently in operative driving relation to the film; in fact it is a part of the film moving mechanism.

The other end of motor shaft 141 has a spiral gear 154 (Fig. 3), meshing with a spiral gear 155 on a transverse shaft 156 that drives the usual intermittent film movement mechanism (not shown). Shaft 156 also drives the shutter mechanism, and has for this purpose a spiral gear 157 (see Fig. 15) meshing with a spiral gear 158 which is mounted fast on the forward end of hollow shutter shaft 160. Shaft 160 is shown in Fig. 15 to be journaled in suitable bearings 161, 162 and 163 supported by camera box 42. On the extreme forward end of hollow shaft 160 is the usual shutter 166. Mounted to rotate within hollow shaft 160 is an inner shaft 167, and mounted on the forward end thereof is a shutter leaf 168.

These shutter members 166 and 168, which are of conventional form, will be understood to be mounted to rotate between photographic aperture 82 and the film within camera box 42, and to be adapted to take such a relative position as to provide substantially a 170° angular opening therebetween, so as to uncover the film for substantially 170° of rotation when shutter shafts 160 and 167 are rotated as one; or, are adapted by relative adjustive rotation of said shafts, to reduce the angular opening between the shutter members down to zero, or in other words to effect what is known as a dissolve. The means for controlling the dissolve mechanism within the shiftable camera box 42 are mounted on stationary camera case 10, and are connectible at the proper times with said dissolve mechanism. For the purpose of disclosing these connections and control means it will be necessary to discuss in some detail the dissolve mechanism.

Figs. 11 and 12 show the rearward ends of shutter shafts 160 and 167. Fastened on hollow shaft 160, immediately to the rear of camera box rearward wall 42a, is a gear sleeve 170, the forward end of which is formed as a worm 171, and the rearward end of which is journaled in a bearing 172 carried by a mounting casting 195 secured to camera carrier 42. The rearward end of inner shutter shaft 167 has a screw section 174, and mounted to work thereon is a nut member 175. This nut member 175 is fast within a sleeve 176 which slidably fits the bore of gear sleeve 170, and carries studs 177 which project outwardly through longitudinal slots 178 in sleeve 170. The outer ends of studs 177 engage in apertures 178a in a sleeve 179 which is slidably mounted on sleeve 170. This sleeve 179 is embraced at its ends by and is rotatable within a cylindric carrier 180, the lower side of which has a downwardly projecting gear portion or rack 181. This carrier member 180 is constrained against rotation by a way 182 formed in member 195 (Fig. 12) which receives and guides said gear projection 181 for longitudinal movement. Gear portion 181 is formed with spiral gear teeth, and the latter mesh with a spiral gear segment 185. Fast with this gear segment is a depending arm 186, to the lower end of which is pivoted one end of a link 187, the other end of which is pivoted to the lower end of a vertically movable rack 190 (Figs. 11, 12, 12a and 16). This rack 190, which is suitably supported and guided to move in a vertical direction, has on one edge rack teeth 191 which are constantly in mesh with a spur gear 192, which gear is fast on a rearwardly extending hollow shaft 193 journaled in mounted casting 195.

The rearward end of shaft 193 has an integrally formed head 196, having in its rearward surface an off-center aperture 197 (Figs. 10 and 7). Head 196 carries a pointer 198 which is adapted to move through substantially 170° of arc over a calibrated shutter-opening scale 199 inscribed on a plate 200 carried by mounting member 195. Journaled in and longitudinally slidable through a bore 204 in rear housing wall 13 is a shaft 205, the inner end of which carries a crank disc 206 having a crank pin 207, said crank disc and pin being adapted to be received within a countersink 208 formed in the inner surface of wall 13 (Fig. 10). Shaft 205 normally carries crank disc 206 and pin 207 in the latter position by reason of a coil spring 210 placed around said shaft in a counter bore 211 and which acts outwardly against a collar 212 on shaft 205. The exterior end of shaft 205 carries a manual operating crank 214.

Shaft 205 is so located in camera housing wall 13 as to be concentric with shaft 193 when the camera box 42 has been moved to "take" position (Fig. 9). Crank pin 207 on shaft 205 is so arranged that at a time when the camera box is in the position of Fig. 9, it may be drivingly engaged with aperture 197 by forcing crank 214 and shaft 205 inwardly against the force of spring 210 and turning the crank until the pin finds the aperture. This engagement having been made, turning of crank 214 causes rotation of shaft 193 and gear 192, thereby moving rack 190 up or down, depending upon the direction in which the crank is turned. Such movement of rack 190 acts through link 187 and arm 186 to rotate spiral gear segment 185, which in turn acts on spiral gear element 181 to cause longitudinal translation of carrier member 180. The rotating sleeve 179 embraced and carried by member 180 is thus caused to move longitudinally on gear sleeve 170, and in so doing acts through studs 178 to move nut member 176 forwardly or rearwardly within the bore of the gear sleeve. Since the nut member is constrained against relative rotation within the gear sleeve, this longitudinal movement of the nut member causes rotation of screw element 174 relative to gear sleeve 170, and consequently relative rotation of shaft 167 within hollow shaft 160. Thus by this operation the opening between the shutter members carried by the shutter shafts 160 and 167 may be varied between zero and 170°, and this control may obviously be effected while the camera is in full operation. The scale 199 which indicates the degrees of shutter opening is visible from outside the camera through an arcuate double glass walled window 220 in wall 13, with which the scale comes into register when the camera box is in the position of Fig. 9. The double glass is used in this window for the sake of added sound insulation. Preferably, the rear end of inner shutter shaft 167 and the rear end of gear sleeve 170 on hollow shutter shaft 160 are provided with shutter signal devices 222 and 223, respectively, (Figs. 7 and 11). Member 222 is a circular disk, one half of which is painted black to correspond with the shutter opening of the shutter on the forward end of shaft 160, while member 223, which may be painted black all over, is of the same shape as the shutter lead on the forward end of shaft 167. These shutter signal members register with a double glass walled window 225 in rear camera wall 13 when the camera mechanism is in the "take" position described, and indicate at a glance the positions of the two shutter members.

Thus when camera box 42 has been moved by operation of handle 119 to "taking position", the dissolve mechanism carried by said box comes into operative relation with a manual crank which is mounted in the rear exterior housing wall, and which may at that time be operatively engaged with the dissolve mechanism.

The dissolve mechanism also involves automatic devices for accomplishing the dissolve, which likewise register with control devices mounted in the rear camera case wall 13 when the camera box has been moved to the taking position illustrated in Fig. 9. The worm 171 on gear sleeve 170 meshes with worm gear 230 on a vertical shaft 231 (Figs. 11 and 12). Shaft 231 carries a spiral gear 232 which meshes with a spiral gear 233 on a stud shaft 234, said shaft 234 also carrying a spur gear 235. Gear 235 meshes with a spur gear 236, which in turn meshes with another spur gear 237 directly over it.

Gear 236 is mounted to rotate on the inner end of a shaft 240 which is mounted to reciprocate through a bore 241 in casting 195 (Figs. 9, 10 and 16). Movement of shaft 240 inwardly from the position shown in Fig. 9 engages gear 236 with gear teeth 242 on the edge of vertically movable rack 190 which is opposite to the previously mentioned rack teeth 191. Gears 235, 236 and 237 are of sufficient length relative to each other that gear 236 remains in mesh with the other two gears during such movement into mesh with the rack. It will be evident that when gear 236 is thus in mesh with rack gear teeth 242, the rack will be moved in a vertical direction, and will actuate the shutter dissolve mechanism in a manner similar to that effected when hand crank 214 is operated, as previously described. The rack is then being moved by power applied through the gear train from the rotating shutter shaft 160. The upper gear 237 is mounted on a shaft 245 (Fig. 11) which is longitudinally movable in casting 195, gear 237 having a peripheral groove 246 engaged by a fork 247 mounted on the inner end of a control shaft 248 which is mounted for longitudinal reciprocation through a bore 249 in casting 195. Inward movement of shaft 248 from the position shown in Fig. 11 causes gear 237 to move inwardly into engagement with the rack teeth 242 of rack 190, while remaining in mesh with its driving gear 236, and since gears 236 and 237 rotate in opposite directions, the rack is then moved in a direction opposite to that effected during the engagement of gear 236 with the rack, thus causing automatic operation of the dissolve mechanism in a sense opposite to that effected by engagement of gear 236 with the rack.

To prevent gears 236 and 237 from being engaged simultaneously with the rack, there is provided a safety guard in the form of a pivoted yoke 250 (Figs. 9, 13 and 16), the two arms of which have beveled ends 251 which engage conical surfaces 252 on shafts 240 and 248. The relative arrangement of the parts is such that in order for either of the two shafts to move inwardly to engage its gear with the rack, its conical surface 252 in engagement with the beveled end of the corresponding yoke arm must cause the yoke to swing to a position with the beveled end of its other arm moved into locking engagement with the inwardly inclined conical surface 252 of the other shaft. Thus but one of the two shafts can

be moved inwardly at a time, inward movement of either one of the shafts positively locking the other against similar movement.

It has been said that gears 236 and 237 are moved into mesh with rack 190 by virtue of inward movement of shafts 240 or 248, respectively. These shafts are normally yieldingly held in a rearwardly retracted position by means of coil springs 253 and 254, respectively, (Figs. 9 and 11) placed around the shafts in counter bores 255 and 256, and acting outwardly on shaft collars 257 and 258 which work within said counter bores. The outer ends of shafts 240 and 248 are adapted to be actuated by actuating plungers 259 and 260, respectively (Figs. 9 and 17) which are mounted to reciprocate through bores 261 and 262 in rear housing wall 13, and are located in said wall in such positions that plungers 259 and 260 come into end to end register with shafts 240 and 248, respectively, when camera carrier 42 is moved to photographing position (Figs. 7, 9 and 17). The inner ends of plungers 259 and 260 have enlarged heads 261a and 262a, respectively, adapted to engage the adjacent ends of shafts 240 and 248, said heads being engageable against the inner surface of rear wall casting 13 to limit outward movement of the plungers. The plungers are normally yieldingly held in a position with heads 261a and 262a in such engagement with wall 13 (clearing the outer ends of shafts 240 and 248) by means of coil springs 263 and 264, respectively, placed around said plungers in counter bores 265 and 266, and acting outwardly against shaft collars 267 and 268 which work within said counter bores. On the outwardly projecting ends of plungers 259 and 260 are push buttons 259a and 260a, respectively. It will be evident that normally there is no interference between shafts 240 and 248, and their actuating plungers 259 and 260, so that the box or carrier member 42 is free of interference in its transverse shaft; but that, when carrier 42 is in photographing position (Fig. 9), either of the plungers, say 259, may be moved inwardly by pressure of the finger on push button 259a, until the inner end of said plunger engages the outer end of its corresponding shaft 240 and moves the latter inwardly to engage gear 236 with rack 190, with the previously described resulting operation of the dissolve mechanism. Upon release of push button 259a, both members 240 and 259 return to their normal rearwardly extended inoperative positions. Shaft 248 is similarly operated to engage gear 237 with the rack by pushing inwardly on push button 260a.

A means is preferably provided for normally locking the dissolve mechanism in such a way that relative rotation between the two shutter shafts cannot take place during normal operation of the camera. For this purpose there is provided a locking plunger 270 (see Figs. 9, 10, 14 and 16) which is mounted to reciprocate in a bearing 271, the latter extending through and being fastened to camera wall 42a in such disposition that the end of plunger 270 is immediately opposite the rear side of rack member 190. The forward end plunger 270 is provided with horizontally cut teeth 275 (Fig. 14), which are adapted to engage rack teeth 276 on the adjacent side of said rack. A coil spring 277 placed around plunger 270 and engaging a plunger shoulder 278 urges said plunger to move in a direction to engage its teeth 275 with rack teeth 276. It will be evident that such engagement positively locks rack 190 against vertical movement, and hence locks the entire dissolve mechanism adjustment means against operation. When the dissolve mechanism is to be operated, plunger 270 is withdrawn against spring 277 to disengage the rack for vertical movement. Plunger 270 carries for this purpose a plate 280, into one end of which is screwthreaded a push rod 281 which is reciprocable through the aforementioned hollow shaft 193 and projects normally a short distance beyond shaft head 196 (Fig. 10). When the parts are in the position of Fig. 9, and crank 214 is moved inwardly to engage crank pin 207 with aperture 197 for the purpose of accomplishing a manual dissolve, crank disc 206 engages the projecting end of push rod 281 and forces it inwardly, thereby moving plate 280 and locking plunger 270 to disengage said plunger with rack 190. The rack is thus freed for vertical movement, and manual crank 214 may be turned to accomplish the dissolve mechanism operation desired. When crank 214 is released, it moves outwardly under the influence of its spring 210, and so releases push rod 281 and plate 280 to move outwardly under the influence of locking plunger spring 277, which thereupon acts to move the locking plunger into engagement with the rack teeth to lock the dissolve mechanism against further shutter adjustment movement.

Locking plunger 270 is also moved inwardly to release the rack with inward movement of either shaft 240 or shaft 248 in meshing gears 236 or 237, respectively, with the rack. For this purpose shaft 240 has on its extreme inner end an extension 284 (Fig. 16) adapted to engage plate 280 during its inward movement to move said plate and locking plunger 270 inwardly to disengage the rack. For the same purpose, gear 237 which is moved inwardly into mesh with the rack through inward movement of shaft 248, is provided with a projection 286 (Fig. 11) adapted to engage and move plate 280 during such inward movement, and so cause disengagement of the locking plunger with the rack.

The focusing means for the photographic lens is mounted on exterior case 10. It has been described previously how rotation of lens mount barrel 74 within barrel 70 which it screwthreadedly engages causes forward or rearward focusing movement of the photographic lens which is carried by barrel 74. For the purpose of so rotating lens mount barrel 74, said barrel is provided with an integrally formed spur gear 300, which is adapted to mesh with a smaller spur gear 301 keyed on a shaft 302 which is journaled at its two ends in suitable bearings carried by a gear housing 303. Gear 301, the top of which projects outwardly through an opening in housing 303, is of sufficient length that the gear 300 on the longitudinally travelling lens mount will remain in mesh therewith in all positions of such longitudinal travel, as will be clear from Fig. 5.

Pinned on shaft 302 immediately to the rear of gear 301 is a spiral gear 305 which meshes with a spiral gear 306 mounted on the end of a substantially horizontal shaft 307, the latter extending through and being mounted for rotation in a tubular section 303a of housing 303. Mounted on the end of shaft 307, just outside the plane of the side of camera case 10, is a spiral gear 310 which meshes with a spiral gear 311 mounted on the forward end of a horizontal longitudinally extending focusing shaft 312. The forward end of said shaft 312 is journaled within a concentric tubular extension 314 of housing 303, which extension is received within a bore 315 provided in the upper end of a supporting

bracket 316 which extends upwardly from the mounting 36 affixed to case 10 (Fig. 6).

Shaft 312 extends along the side of the camera case 10, below the bulge of camera case door 31, (Figs. 1 and 6) and between door arms 32 and 33 and camera case wall 14 (Fig. 18). The shaft is supported by means of bearings 320 and 321, bearing 320 being mounted on a bracket 322 secured to casing wall 14, and bearing 321 being mounted on a bracket 323 formed integrally with the aforementioned shaft mounting 37.

On the rear end of shaft 312 is mounted a manual operating knob 325, by means of which said shaft may be rotated and the described gear train leading to the lens mount operated accordingly. As a means for focusing the lens from the front end of the camera, there is provided a spiral gear 326 in mesh with focusing shaft gear 311 (Fig. 4), which is on a shaft 327 operable by a manual crank 328.

The view finder for the camera is shown at 330, and is mounted on camera case door 31. An automatic finder parallax adjustment device is associated with and operated by the focusing mechanism described immediately preceding. A view finder carrying bracket 331 is mounted on camera case door 31 (see Figs. 4 and 19), and removably interfitted therein, as by means of vertical dovetail way 332, is a view finder mounting member 333. This mounting member 333 is in the form of a yoke and receives a pair of vertically spaced finder lugs 334 (Fig. 4), a pivot pin 335 extending downwardly through the yoke arms and lugs 334. The view finder swings for its parallax adjustment on this pivot pin 335.

The lugs 334 through which the finder is pivotally mounted to swing on pin 335 are formed on one side of finder head casting 340, the forward end of which carries the view finder objective mounting 341. Secured to the rear end of casting 340 is the rearwardly extending finder casting 342, which is rectangular in cross section (Fig. 18), and diverges somewhat rearwardly, (Fig. 19). The finder casing forms with casting 340 a light conduit from the objective 341 to the rear open end of the casing. The casing carries suitable optical elements, as a collector lens 344 having a ground glass surface 345 at the proper distance back of the objective, and a second collector lens 346 back of lens 344.

A coil torsion spring 348 is placed around finder mounting pivot pin 335, with one end bearing against finder mounting member 333 and the other bearing against finder head casting 340 (see Figs. 4 and 19), said spring being so arranged as to urge the finder body to swing inwardly about pivot 335 towards the camera case.

Means are then provided for moving the finder body outwardly, in opposition to this spring, in accordance with operation of the camera lens focusing means. For this purpose an operative interconnection is provided between the manual focusing shaft 312 and the finder body, this interconnection embodying a series of selective camming elements, each of which corresponds to a camera lens of given focal length.

Mounted on the finder body is a horizontal cam carrying shaft 350 (Figs. 18 and 19), said shaft being fitted non-rotatably in mountings 351 affixed to the finder casing. The several cams, designated at 353, 354, 355, and 356, are then rotatably mounted on this shaft 350, each cam being in the form of a flat plate having a curved outer camming edge. It will be observed from Fig. 18 that the several cam plates extend outwardly from their hubs at different elevations with reference to the hub axis, so that the cam plates may all be moved to the horizontal extended operative position together and will lie flat together, one above the other, in that position. In the position shown in the drawings cam plates 354, 355, and 356 are in this extended position, while the cam plate 353, which would be lowermost when moved to such an extended position, is shown rotated through 180°, to the inoperative position, adjacent the lower side of the finder body. It will be obvious that cams 354, 355 and 356 are likewise movable in succession to a similar inoperative position.

The outer operative edge of each cam plate is curved in accordance with the focal length of the lens with which that cam is to be used. It will be observed that the several cams 353, 354, 355, and 356 are of progressively decreasing width. A movable cam actuating member 360 is provided to operate on the curved cam edges, and it will be obvious that said member will be enabled to engage the cam edge of only the lowermost cam in any given case, since all cam plates above are always of narrower width. Accordingly, to select any cam for use, that cam and all cams above it are placed in the outwardly extended position, while all cams below are folded down and under the cam body to the inoperative position, as taken by cam 353 in Figs. 18 and 19.

The cam actuating member 360 is in form of a roller, and is adapted to be moved longitudinally of the camera and to engage and operate on the curved outer edges of the cam plates.

This roller is mounted for rotation on the upper end of a carrying arm 361, which is pivotally mounted at its lower end on a pivot pin 362 which is coaxial with the pivot axis of door arms 32 and 33. This pin is mounted on a carrier plate 364, the upper end of which has a screwthreaded bore 365 (Fig. 18) which works on a screwthreaded section 366 of focusing shaft 312. Carrier member 364 is formed with a slide plate 368 which is slidable in a longitudinally extending way 369 formed in a guide plate 370 secured against camera case wall 14. Arm 361 has a flat surface 371 which is adapted to engage a flat surface 372 on carrier member 364 when said arm is in the position of Fig. 18, the arm being held in such engagement by the action of the finder mounting spring 348 which urges the finder and cams carried thereby to press arm 361 against carrier 364. The head of the screw 374 that secures cam rollers 360 on the upper end of arms 361 is received within a longitudinal way 375 formed in a guide strip 376 secured to door 31, and moves in this way as arm 361 moves with carrier 364 to move roller 360 along the cam plates. When camera case door 31 is swung downwardly on pivots 34 and 35, this strip 375 engages the head of screw 374 and so causes arm 361 to swing downwardly on its pivot 362, which is concentric with the door pivot. Thus the camera case door 31, finder, and finder actuating roller arm 361 all swing down together on a single pivot axis, while the arm carrier 364 remains stationary.

It will now be evident that the rotatable focusing shaft acts as a lead screw to move carrier 364 and arm 361 forwardly or rearwardly as the shaft is turned in one direction or the other, and that the cam actuator 360 carried thereby acts on the curved outer edge of the selected finder cam to swing the finder on its pivot 335 in accordance with the characteristics of that cam. It will be

understood, of course, that the screwthreads between the focusing shaft and the cam roller arm carrier are so arranged that the cam roller moves towards the front end of the camera as the lens is moved forwardly to shorten the distance of focus, and that each cam is designed in accordance with a lens of given focal length, so that by selection of the proper cam for a lens of given focal length in the camera, the finder will automatically be caused to swing, as the focusing shaft is rotated, in such a manner as to maintain the point intersection of its axis with the optical axis of the camera lens always at the distance at which said camera lens if focused.

Reference is here made to my copending application entitled View finder parallax and photographic lens focusing mechanism for motion picture camera, filed March 16, 1934, Ser. No. 715,838, in which the above described focusing and finder parallax adjustment means are claimed. Certain features of the dissolve mechanism as here disclosed are claimed in a copending application, Shutter dissolve mechanism, filed May 5, 1934, Ser. No. 724,193, and certain herein disclosed control devices for a shutter dissolve mechanism are claimed in a copending, divisional application entitled Shutter dissolve mechanism, filed December 7, 1935, Ser. No. 53,380. Claims to those means and mechanisms, in themselves and regardless of the type of camera, are made in said co-pending applications. In this application such means and mechanisms enter only as typical elements of the whole combination that makes up the complete sound proofed camera.

From what has now been said it will be seen that I have provided a complete sound insulated motion picture camera, characterized by extreme compactness, and by convenience and facility of adjustment, operation and control. The sound insulated exterior case of the camera has been designed to support the interior camera mechanism at the bottom through sound insulation material, and its various walls are lined with a layer of sound insulation material and are of such conformation that said layer closely approaches the interior camera mechanism at the sides and top, without actually touching it, being shaped, however, to accommodate movement of certain components of the camera mechanism. The air space between the camera mechanism and the layer of insulation material serves to minimize transference of mechanism vibrations to the exterior case, and thus lessens possibility of noise from that source.

The exterior case embodies a separate magazine compartment, which is adapted to be easily opened up to reach the inner film magazine without the necessity of opening the entire exterior camera case. This provision is of obvious advantage.

The rear wall of the exterior case permanently carries certain optical viewing and mechanical control devices which are cooperable, in certain positions of the interior shiftable camera mechanism box or carrier, with corresponding devices and mechanisms located on said shiftable carrier. Thus the devices which are mounted on said shiftable carrier are operable and manually controllable from outside the closed sound insulated case in which the carrier moves. The camera lens focusing mechanism, and the finder and finder parallax adjustment means, are mounted permanently on the outside of the exterior case of the camera.

It will thus be seen that I have provided a unitary and compact sound insulated camera, which is to be distinguished from the large sound proof boxes which have heretofore been placed around conventional cameras, and which have been so heavy and cumbersome as to require specially designed tripods to carry their weight. The present camera is of over-all dimensions but slightly larger than the conventional camera, and of but little increased weight, therefore requiring for its support nothing more than the usual standard tripod.

It will be understood the drawings and description are to be considered merely as illustrative of and not restrictive on the broader claims appended hereto, for various changes in design, structure and arrangement may be made without departing from the spirit and scope of said claims.

I claim:

1. A sound insulated motion picture camera, comprising a closed exterior box-like case, an interior camera mechanism, an insulation base pad on the inside surface of the lower wall of said case supporting the lower side of the camera mechanism, horizontal projections extending outwardly from the ends of the camera mechanism, horizontal projections extending inwardly from the camera case overlying said last mentioned projections, pads of sound insulation material fitted tightly between the pairs of projections at the two ends of the case, and screws at the two ends of the case passing upwardly through the insulation base pad, the camera mechanism and case projections, and the insulation pads lying between said projections.

2. A sound insulated motion picture camera, comprising a closed exterior case, an interior camera structure positioned within said case embodying a stationary frame and a mechanism carrier member transversely shiftable on said frame, sound insulation material between said case and said camera structure, a drive motor on said carrier member, a rearwardly extending drive shaft for said motor, a gear on said shaft, a reciprocable manual drive shaft extending through the rear wall of the exterior case, a gear on the inner end of said shaft adapted to mesh with the first mentioned gear when the carrier member is in one position, said manual drive shaft being retractable rearwardly to disengage said gear to permit the carrier member to be shifted transversely, and spring means yieldingly urging said manual drive shaft toward retracted position.

3. A sound insulated motion picture camera, comprising a closed exterior box-like case, an interior camera mechanism, an insulation base pad supported by the lower wall of said case and supporting the lower side of the camera mechanism, horizontal outwardly extending flanges on the lower portion of the camera, said flanges overlying marginal portions of the insulation base pad, horizontal inwardly extending flanges on the exterior case overlying said last mentioned flanges, pads of sound insulation material fitted tightly between the pairs of upper and lower flanges, and means clamping together said marginal portions of the insulation base pad and said inwardly extending camera case flanges.

4. In a motion picture camera comprising a closed sound insulated case, the combination of a camera mechanism within the case laterally shiftable therein from one position to another, said camera mechanism including a manually actuatable instrumentality, an actuating device for said instrumentality mounted in an exterior

wall of the closed sound insulated case and operatively connectible with said instrumentality when in one of its positions, said actuating device comprising a shaft mounted for reciprocation through said exterior wall on a line at right angles to the direction of lateral shifting movement of said camera mechanism, the inner portion of said shaft being adapted for operative cooperation with said instrumentality when the shaft is moved inwardly through said exterior wall, and the shaft being movable in an outward direction to a retracted position to clear the camera mechanism for its lateral shifting movement at right angles to the direction of retractive movement of said shaft.

GEORGE A. MITCHELL.

From: Kate Eggert
To: Burg, William@Parks
Subject: Fwd: Re: Commercial survey
Date: Thursday, July 28, 2016 2:07:23 PM

Hi William,

Here are the emails between Teresa Grimes of GPA and I regarding The Factory's status codes.

Waiting to hear back to whether it's okay to share with the Commissioners.

Best,
Kate

---------- Forwarded message ----------
From: "Kate Eggert" <kateblaine@gmail.com>
Date: Jul 28, 2016 2:00 PM
Subject: Re: Commercial survey
To: "Teresa Grimes" <teresa@gpaconsulting-us.com>
Cc: "Allison Lyons" <allison@gpaconsulting-us.com>

Got it. Thanks! Could we share this with the commissioners?

Best,
Kate

On Jul 28, 2016 1:38 PM, "Teresa Grimes" <teresa@gpaconsulting-us.com> wrote:

> Kate:
>
> We aren't. We have it as a 3S/6L. Here is our current summary statement:
>
> This property was constructed in 1929 by the Mitchell Camera Corporation. It appears eligible for listing in the National Register (3S) and California Register (3CS) as an individual property through survey evaluation. It is significant in the context of West Hollywood 1926 - World War II under national and state criterion A for its association with the history of manufacturing and the film industry in West Hollywood. The Mitchell Camera Corporation was an innovative manufacturer of camera and sound equipment that enabled the development of sound pictures and cinematography. The building was determined ineligible for local designation through local government review process; however, the property may warrant special consideration in local planning (6L).

We haven't written the summary of integrity yet.

Hope this clarifies.

TERESA GRIMES

Principal Architectural Historian | teresa@gpaconsulting-us.com

617 S. Olive Street, Suite 910

Los Angeles, CA 90014

(310) 792-2690

www.gpaconsulting-us.com

El Segundo • Los Angeles

Sacramento • San Luis Obispo

From: Kate Eggert <kateblaine@gmail.com>
Sent: Thursday, July 28, 2016 1:31:18 PM
To: Teresa Grimes
Cc: Allison Lyons
Subject: Re: Commercial survey

I guess I should have clarified - why are you proposing The Factory to be downgraded to 3CS?

Best,
Kate

On Jul 28, 2016 1:15 PM, "Kate Eggert" <kateblaine@gmail.com> wrote:

> Hi Teresa,
>
> Thanks for emailing!
>
> Sounds good. PCR said you had it down for only California Register. And it's listed as 3CS in your survey.

Could we share your email with the commission. Or a statement? Maybe a formal letter saying where you're at right now?

Many thanks!

Best,
Kate

On Jul 28, 2016 12:54 PM, "Teresa Grimes" <teresa@gpaconsulting-us.com> wrote:

> Kate:
>
> Wow. Funny you should write. Allison and I were just discussing the building. We actually have it as a 3S/6L. The 3S is for its association with Mitchell. We were going to wait and see if the SHRC goes for the exceptional significance in LGBT history. The 6L is for building that have been turned down by local jurisdictions.
>
> Please let us know what happens so we can accurately summarize the eligibility on the form.
>
> Good Luck!
>
> **TERESA GRIMES**
>
> Principal Architectural Historian | teresa@gpaconsulting-us.com
>
> 617 S. Olive Street, Suite 910
>
> Los Angeles, CA 90014
>
> (310) 792-2690
>
> www.gpaconsulting-us.com
>
> El Segundo • Los Angeles
>
> Sacramento • San Luis Obispo

From: Kate Eggert <kateblaine@gmail.com>
Sent: Thursday, July 28, 2016 12:22 PM
To: Allison Lyons
Cc: Teresa Grimes
Subject: RE: Commercial survey

Hi Allison,

We're heading to Sacramento for the National Register hearing.

We just saw that GPA listed The Factory as 3CS. Why not National? Especially with Mitchell Camera having world-wide influence.

Please let me know as soon as you can.

Best,
Kate

On Jul 12, 2016 8:16 AM, "Allison Lyons" <allison@gpaconsulting-us.com> wrote:

> Hi Kate,
>
> The latest draft of the context statement starts on page 19 here:
> http://cms6ftp.visioninternet.com/weho/packets/hpc/10A.pdf
>
> We're making several revisions to the text (including more about the Mitchell Camera Factory) and modifying the list of potential resources based on commissioner feedback from the June 27th meeting and our continuing research.
>
> **ALLISON M. LYONS**
>
> Associate Architectural Historian | allison@gpaconsulting-us.com | (310) 792-2690
>
> GPA CONSULTING | www.gpaconsulting-us.com
>
> **From:** Kate Eggert [mailto:kateblaine@gmail.com]
> **Sent:** Monday, July 11, 2016 5:07 PM

To: Teresa Grimes <teresa@gpaconsulting-us.com>; Allison Lyons <allison@gpaconsulting-us.com>
Subject: Re: Commercial survey

I guess I meant the context statement.

On Mon, Jul 11, 2016 at 5:05 PM, Kate Eggert <kateblaine@gmail.com> wrote:

> Didn't you recently present a draft at HPC?
>
> On Mon, Jul 11, 2016 at 5:04 PM, Teresa Grimes <teresa@gpaconsulting-us.com> wrote:
>
> > Kate:
> >
> > What do you mean by survey? We are working on the research and inventory forms now. Do you mean the list of address we are working from? I'm actually updating it. I can send it to you shortly.
> >
> > Best,
> >
> > **TERESA GRIMES**
> >
> > **GPA Consulting**
> >
> > Principal Architectural Historian | teresa@gpaconsulting-us.com
> >
> > 617 S. Olive Street, Suite 910
> >
> > Los Angeles, CA 90014
> >
> > (310) 792-2690
> >
> > www.gpaconsulting-us.com
> >
> > El Segundo • Los Angeles

Sacramento • San Luis Obispo

From: Kate Eggert <kateblaine@gmail.com>
Sent: Monday, July 11, 2016 10:43 AM
To: Teresa Grimes; Allison Lyons
Subject: Commercial survey

Hi Teresa,

Could we look at a copy of the commercial survey?

Best,
Kate

HOLLYWOOD HERITAGE, INC.
P.O. Box 2586
Hollywood, CA 90078
(323) 874-4005 • FAX (323) 465-5993

7 July, 2016

Julianne Polanco
State Historic Preservation Officer
1725 23rd Street, Suite 100
Sacramento, CA 95816
916-445-7000
julianne.polanco@parks.ca.gov

RE: Studio One (The Factory)/Mitchell Camera Corp., 665 North Robertson Blvd. National Register Nomination

Dear Ms. Polanco:

The Board of Directors of Hollywood Heritage, its Preservation Issues Committee and its members thank you for the opportunity to comment on the proposed nomination to list Studio One (The Factory)/Mitchell Camera Corporation at 665 North Robertson Boulevard on the National Register of Historic Places.

Hollywood Heritage supports landmark designation of this historic building because of its multi-faceted importance to Hollywood and Southern California. The building known as Studio One or The Factory and previously as Mitchell Camera Corporation, first built in 1929, qualifies for landmark status not only because of its unique architecture and historic use by the Mitchell Camera Company through the 1940's, but as an essential space for the development of the LGBT community in Los Angeles as Studio One.

Mitchell Camera Corporation specifically built this site to manufacture silent-running News Cameras, an important step in the evolution of the film industry. By the 1940's, the majority of movies shown in theatres had been filmed with Mitchell cameras. Protecting the history of Los Angeles' primary industry is critical, especially when such few original sites remain and development so often threatens those that do. Both for the architecture, constructed for the specific manufacturing of technologically new cameras for Hollywood and beyond, and the building's contribution to Los Angeles history, the Mitchell Camera Corporation building is important to preserve.

However, the importance of this structure also lies in its reuse, beginning in 1974, as a gay nightclub known as Studio One. For nearly twenty years the club offered a safe space for gay men to meet, interact, and celebrate their identity. The culturally significant people who visited or performed at Studio One, such as Liza Minelli, Joan Rivers, Linda Hopkins and Wayland Flowers, demonstrated a support for the club and the community that was rare for the time. By bringing their acts to Studio One, those high-

profile performers undoubtedly brought non-gay people into a community they had never been exposed to and demonstrated that the LGBT community was nothing to fear. The popularity of this dance club went a great distance in bringing together the general public and the LGBT community, working to break down the estrangement between the groups that had previously existed. Without clubs like Studio One, the opportunity for gays and straights to mix socially was limited and this exposure facilitated the rapid development of gay rights in the 1980s and onward.

Hollywood Heritage works to protect the valuable built history of Hollywood and Los Angeles and the Studio One building is a significant part of that history. Not only does the building reflect the historic shift of the film industry from silent pictures to talking pictures through its manufacturing of new silent-running cameras. The building also reflects the important development of the LGBT community in Los Angeles and its inclusion and acceptance in mainstream society. Therefore, Hollywood Heritage voices its support for the listing of 665 North Robertson Boulevard on the National Register of Historic Places.

About Hollywood Heritage, Inc. For three decades Hollywood Heritage has been an advocate of the preservation and protection of Hollywood's historic resources. We support the goal of preserving what is most significant in Hollywood, while encouraging responsible new and infill development. Our organization has nominated many of the current Historic Cultural Monuments, listed the Hollywood Boulevard Commercial and Entertainment District in the National Register of Historic Places at the national level of significance, provided technical assistance to developers and owners of significant properties, and participated in public policy discussions through the formulation of the Community Redevelopment Plan of 1986 and subsequent urban design plans, specific plans and in the property entitlement discussion involving historic resources. These efforts have resulted in the rehabilitation of significant landmarks and districts in Hollywood.

Sincerely,

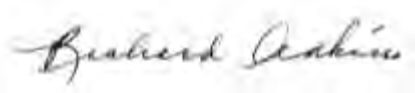

Richard Adkins
President, Hollywood Heritage, Inc.

CC: William.burg@parks.ca.gov
westhollywoodheritageproject@gmail.com

California Dept. of Parks & Recreation
1416 9th Street Sacramento, CA 95814
P.O. Box 942896
Sacramento, CA 94296

West Hollywood Heritage Project
www.westhollywoodheritageproject.com
westhollywoodheritageproject@gmail.com

July 15, 2016

Dear Commissioners,

I write to you in support of the nomination of The Factory building in West Hollywood, CA as a designated historic site. As you may know the building at 661 N. Robertson Blvd., in West Hollywood, was formerly the site of the Mitchell Camera Corporation as well as the site of the Studio One disco and the Backlot Theatre. I strongly believe that either one of these important iterations makes this site well worth preserving as a historic landmark.

As current President of the Mitchell Camera Corporation and a professional in the motion picture industry for over 40 years I can attest to the great importance of the company and the site to the history of movies and television not only America but worldwide. Mitchell cameras were the standard by which all other motion picture cameras were compared and its precision and reliability became (and remains) legendary in the industry since the company's founding in 1919 (www.mitchellcamera.com). .

Mitchell Camera Corporation had the building built in 1929 to house their motion picture camera design and manufacture works. The building is an iconic structure in West Hollywood and the surrounding area. It is a classic Daylight Factory with a history related to the pioneering factory designer and builder Albert and Julius Kahn. While in the building, Mitchell Camera Corp designed and manufactured motion picture cameras that revolutionized filmmaking; giving rise to, at the time, a new film artist called the cinematographer. By 1946, 85% of all movies worldwide were shot on Mitchell cameras. The technology designed at The Factory building was the basis for all motion picture cameras until the introduction of digital in the 1990s.

Scott Forbes opened Studio One disco and the Backlot Theatre in 1974. Prior to Studio One, gay bars were small, windowless, anonymous buildings (in which one entered from the back of the building). The disco filled a vital community need: it celebrated sexual freedom for gay men. Studio One took the gay bar out of the closet, and helped bring gay men out too. Studio One's massive, mainstream influence and success helped bridge the cultural divide between the gay community and the dominant heterosexual society. And in the AIDS crisis, especially the harrowing early years, the disco helped raise desperately needed money and provided a place of community and hope and strength.

The Factory building is an important building and is central to the story/stories of America/Americans. The Factory building is a quintessential American building given its connection to the factory designing/building pioneers that helped create Ford's assembly line, and its pivotal role in movie-making

history, and its crucial role in advancing LGBTQ civil rights. The Factory building must be listed on the National Register of Historic Places. It is my sincerest hope that the Commissioners of the

Most Sincerely,

Joseph Lester Dunton, President,
Mitchell Camera Corporation
JDC Wilmington

National Trust *for* Historic Preservation
Save the past. Enrich the future.

July 22, 2016

Mr. Bryan K. Brandes, Chair
California State Historic Resources Commission
P.O. Box 942896
Sacramento, CA 94296-0001

VIA email to Jay Correia, California Office of Historic Preservation

Re: Nomination to National Register of Historic Places - Mitchell Camera Corporation/Studio One

Dear Chair Brandes and Members of the State Historic Resources Commission,

On behalf of the National Trust for Historic Preservation, I am writing to express support for designation of the Mitchell Camera Corporation/Studio One in West Hollywood, CA, to the National Register of Historic Places with a Local level of significance.

The National Trust for Historic Preservation acknowledges the importance of this industrial building designed by the Trucson Steel Corporation. Constructed in 1929 to house the Mitchell Camera Corporation, the motion picture cameras designed and manufactured at this site have been widely-recognized for their role in revolutionizing filmmaking and cinematography. By minimizing noise and maximizing functionality, Mitchell cameras enabled moving pictures to move from the silent era and transition into the widely popular "talking" pictures. The Mitchell Corporation continued to innovate and influence motion picture camera technology until the introduction of digital filmmaking. Today the original Mitchell Camera Corporation factory stands as one of the last remaining industrial buildings in West Hollywood built specifically to support the technical aspects of the film industry.

The functional and flexible Trucson Steel modular design allowed this large industrial building to serve a variety of successful uses in the decades following the departure of Mitchell Camera, but it is most significant for its conversion into Studio One and the Backlot Theater in 1974. The Studio One disco quickly became a hotbed for celebrity performers, and its cutting-edge sound and light systems, talented djs, and large dance floor regularly drew more than 1,000 people each night. More importantly, Studio One and the Backlot filled a vital community need by providing a safe space for gay men to proudly and openly celebrate their identity at a time when gay culture was largely closeted. The mainstream influence, high visibility, and economic success of Studio One helped bridge tensions and the cultural divide between the gay community and

Los Angeles Field Office
700 South Flower Street, Suite 1100 Los Angeles, CA 90017
E info@savingplaces.org P 213.232.1123 **www.PreservationNation.org**

heterosexual society. Studio One also was one of the first places to publicly confront the growing AIDS epidemic in the 1980s, serving as a place of hope and strength for the gay community and hosting celebrity events to draw public attention to the growing health crisis and raise funds for those battling with AIDs.

For these reasons we believe the Mitchell Camera Corporation/Studio One satisfies the requirements for designation at a Local level of significance under Criterion A – "Property associated with events that have made a significant contribution to the broad patterns of our history." The National Trust for Historic Preservation supports the application for designation of the Mitchell Camera Corporation/Studio One to the National Register of Historic Places. Thank you for considering our comments.

Sincerely,

Christina Morris, Field Director
Los Angeles Field Office

Cc: Julianne Polanco, SHPO, Office of Historic Preservation (OHP)
Jay Correia, OHP
Amy Crain, OHP
William Burg, OHP
Adrian Scott Fine and Linda Dishman, Los Angeles Conservancy
Richard Adkins, Hollywood Heritage
Krisy Gosney and Kate Eggert, West Hollywood Heritage Project

From:	Andrew Atkin
To:	Polanco, Julianne@Parks; Burg, William@Parks; westhollywoodheritageproject@gmail.com
Subject:	RE: The Factory nomination
Date:	Tuesday, June 28, 2016 8:16:07 PM

To whom it may concern;

I support The Factory's listing on the National Register of Historic Places (for Mitchell Camera Corp and/or Studio One/Backlot).

Let's make it happen!!!

Carol DiPietro
192 Seascape Ridge Dr
Aptos, CA 95003

Carol DiPietro

July 2, 2016

I support the nomination of The Factory building in West Hollywood, CA (Mitchell Camera Corp-Studio One/Backlot).

The building is an iconic structure in West Hollywood and the surrounding area. It is a classic Daylight Factory with a history related to the pioneering factory designer and builder Albert and Julius Kahn.

Mitchell Camera Corporation had the building built in 1929 to house their motion picture camera design and manufacture works. While in the building, Mitchell Camera Corp designed and manufactured motion picture cameras that revolutionized filmmaking; giving rise to, at the time, a new film artist called the cinematographer. By 1946, 85% of all movies worldwide were shot on Mitchell cameras. The technology designed at The Factory building was the basis for all motion picture cameras until the introduction of digital in the 1990s.

My business partner, Scott Forbes opened Studio One disco and the Backlot Theatre in 1974. Prior to Studio One, gay bars were small, windowless, anonymous buildings (in which one entered from the back of the building). The disco filled a vital community need: it celebrated sexual freedom for gay men. Studio One took the gay bar out of the closet, and helped bring gay men out too. Studio One's massive, mainstream influence and success helped bridge the cultural divide between the gay community and the dominant heterosexual society. And in the AIDS crisis, especially the harrowing early years, the disco helped raise desperately needed money and provided a place of community and hope and strength.

Additionally, the Backlot featured the talents of Joan Rivers, Rosanne Barr, Wayland Flowers, Melba Moore, Julie Budd to name just a few and attracted a high caliber audience, while in the next room gay men danced to the latest in disco music and special effects. This sort of 'meshing' certainly provided an outlet for exposure, which lead to acceptance of alternate lifestyles. This was an important step in getting to the much more progressive views and laws that exist today for the LGBTQ community.

The Factory building is an important building and is central to the story/stories of America/Americans. The Factory building is a quintessential American building given its connection to the factory designing/building pioneers that helped create Ford's assembly line, and its pivotal role in movie-making history, and its crucial role in advancing LGBTQ civil rights. The Factory building must be listed on the National Register of Historic Places.

Sincerely,

Carol DiPietro

Carol DiPietro

JDC Wilmington Camera Services

October 25, 2016

Dear Commissioners,

My name is Joe Dunton. I am the current owner of Mitchell Camera Corporation. I have owned Mitchell Camera since 1986. In my possession, are all the existing Mitchell Camera archives going back to its time at 'The Factory' in West Hollywood, California.

This letter is to confirm that the design and manufacture of all Mitchell Cameras done during the time period of 1929 to 1946 were done in the Mitchell Camera factory located at 661 N. Robertson Blvd, West Hollywood, California.

Mitchell Camera's administrative office was located at 665 N. Robertson Blvd. This where the secretaries sat, and where visitors checked in and packages would be delivered.

Thank you for your time and consideration of this fact.

Sincerely,
Joe Dunton, MBE, BSC

JDC Wilmington Camera Services 905 N. 23rd St. Wilmington, NC 28405 (910) 343-108

Mark Meinke

10702 Norman Avenue
Fairfax, VA 22030
Email: mwmeinke@gmail.com

July 3, 2016

State Historic Resources Commission
1725 23rd Street, Suite 100
Sacramento, CA

Dear Commissioners,

RE: The Factory nomination, West Hollywood, CA

I wholeheartedly support the nomination of the Mitchell Camera Company site, at 665 N Robertson Boulevard & 652 N. La Peer Drive in West Hollywood, CA. The building is an iconic structure in West Hollywood and the surrounding area. It is a classic Daylight Factory with a history related to the pioneering factory designer and builder Albert and Julius Kahn.

Apart from its significance as a commercial building and pioneering factory design, the site is of major significance to the LGBTQ community, one of the underrepresented communities in the national inventory of historic sites. It is important as an intersection of the LGBTQ community and the heterosexual community in a major entertainment space as Studio One disco and the Backlot Theatre, opened in 1974. Studio One took the gay bar out of the closet, and helped bring gay men out too. Studio One's massive, mainstream influence and success helped bridge the cultural divide between the gay community and heterosexual society. In the AIDS crisis, the disco helped raise desperately needed money and provided a place of community and hope and strength.

The Factory building is an important building and is central to the story/stories of America/Americans, a quintessential American building given its connection to the factory designing/building pioneers that helped create Ford's assembly line, and its pivotal role in movie-making history, and its crucial role in advancing LGBTQ civil rights.

As founder of Washington, DC's LGBTQ historical and archival organization Rainbow History Project and as co-founder of the national LGBTQ historic preservation support and advocacy organization the Rainbow Heritage Network, I appreciate the importance of preserving such major sites in the national historic site inventory.

I trust you will support the nomination at your July 29th meeting.

Sincerely,

Mark W. Meinke

Rainbow Heritage Network
10702 Norman Avenue, Fairfax, VA 22030

July 10, 2016

State Historical Resources Commission
1725 23rd Street, Suite 100
Sacramento, CA 95816

Dear Commissioners,

RE: The Factory nomination, West Hollywood, CA

The Board members listed below of the Rainbow Heritage Network, the national LGBTQ historic preservation support and advocacy organization wholeheartedly support the nomination to the National Register of the Mitchell Camera Company site, also known as The Factory/Studio One, at 665 N Robertson Boulevard & 652 N. La Peer Drive in West Hollywood, CA. The building is an iconic structure in West Hollywood and the surrounding area. It is a classic Daylight Factory with a history related to the pioneering factory designer and builder Albert and Julius Kahn.

Apart from its significance as a commercial building and pioneering factory design, the site is of major significance to the LGBTQ community, one of the underrepresented communities in the national inventory of historic sites. It is important as an intersection of the LGBTQ community and the heterosexual community in a major entertainment space as Studio One disco and the Backlot Theatre, opened in 1974. Studio One took the gay bar out of the closet, and helped bring gay men out too. Studio One's massive, mainstream influence and success helped bridge the cultural divide between the gay community and heterosexual society. In the AIDS crisis, the disco helped raise desperately needed money and provided a place of community and hope and strength.

The Factory building is an important building and is central to the story/stories of America/Americans, a quintessential American building given its connection to the factory designing/building pioneers that helped create Ford's assembly line, its pivotal role in movie-making history, and its crucial role in advancing LGBTQ civil rights.

As board members of Rainbow Heritage Network, we appreciate the importance of preserving such major sites in the national historic site inventory. We trust you will support the nomination at your July 29th meeting.

Sincerely yours,

Katie Batza, Co-Chair
Mark Meinke, Treasurer
Jack Gieseking
Milo Miller
Debbie Richards

Megan Springate, Co-Chair
Paula Martinac, Secretary
Jeffrey Harris
Eli Pousson

From: West Hollywood Heritage Project
To: Burg, William@Parks
Subject: Fwd: Save The Factory
Date: Wednesday, October 19, 2016 11:18:29 AM

---------- Forwarded message ----------
From: <mike.follen@aol.com>
Date: Sunday, October 16, 2016
Subject: Save The Factory
To: julianne.polanco@parks.ca.gov, william.berg@parks.ca.gov, westhollywoodheritageproject@gmail.com
Cc: mike.follen@aol.com

Dear Commissioners,

I support the nomination of the Factory Building in West Hollywood, the former home of the Mitchell Camera Factory, as well as the legendary nightclub Studio One & Backlot Theater, to historical status. Both of these former businesses uniquely revolutionized their individual Industries.

Excuse the length of my letter but this issue is dear to my heart as well as my respect for its historical significance to West Hollywood, and my personal preservation sensibilities.

As you most likely are aware of, Mitchell Camera Corporation was founded in 1919 and became the Camera and movie industry standard. Mitchell became synonymous with Vista Vision, Panavision & Technicolor. It's patented camera movements revolutionized the film industry. It's founder George Mitchell was awarded an honorary Academy Award in 1952, and Mitchell Camera Corporation itself, received Academy Awards for technical achievement in 1939, 1936 & 1968.

Mitchell Cameras were also used in the making of Newsreels and documentaries during WWII, and were used by the US government and the OSS during WWII, as well other countries.

My first trip to see the Mitchell Factory, was with my dad Jack Follen, in the early 1960's, he was a US Army Air Force Captain & fighter pilot during WWII, stationed in England. He had grown up in LA and was quite familiar with Mitchell's Factory because he was a local resident and because of their camera use during the war. He extolled the virtues of their use during the war.

My great uncle, Monsignor Follen, was a prominent leader in the Catholic Church in Los Angeles from the 1920's until his death in 1953. Many of his close friends and golf buddies were famed Irish Catholic movie stars at the time, who were also his parishioners. He was a noted Camera buff and amateur photographer who filmed and shot countless reels of film footage and camera stills, with professional style, industry quality Mitchell Cameras. His church construction and travel exploits, family footage and private moments captured of stars

such as friends James Cagney, Bing Crosby, Edmund O'Brien, Bette Davis and Loretta Young, were all taken with the use of Mitchell Camera equipment.

The Factory structure is iconic on several fronts, to destroy it is to eradicate an amazing piece of history, at a time when so few people are even familiar with, or aware of pertinent historical facts.

West Hollywood was put on the map by the motion picture industry, how can its roots and guts be ripped out and systematically destroyed in the name of change and progress that doesn't honor its historical significance?

Studio One & The Backlot Dinner Theater were one of a kind entertainment venues, a nightclub and dinner theater the likes of which didn't exist before or hasn't since, on a scale as grand as Scott Forbes created at Studio One. Where else could anyone go then or now, to be entertained live, by so many of the entertainment greats of that era? Where else could you go to hang out with The Pointer Sisters, Streisand, Patti LaBelle, Peggy Lee, Eartha Kit and the scores of A-list performers who regularly appeared at Studio One's Backlot and also frequented its popular disco? NOWHERE!!! Nowhere before or since! It was more than a disco, club, nite spot, it was and is truly a place of historical significance, in a town that's in the heart of an industry, that put the west coast on the map!

Studio One surpassed the iconic Studio 54 of New York through longevity and its superior quality of entertainment. It was a Gay Mecca, the first of its kind that gave an acceptable voice to the Gay community, provided a safe haven for them to enjoy entertainment, and featured an incomparable calibre of world class performers not to be compared with any entertainment venue of its time or since. Yes, it was a marvelous home to the Gay community but it was also home to movie and entertainment industry giants, and people from all walks of life who simply wanted to have a great time listening to the best music, while enjoying the best dance floor and dinner theater in Southern California, the west coast and I daresay, the entire country. Not since the world famous nightclub, the Chez Paree, closed in Chicago, was there ever a place like Studio One, that regularly provided world famous celebrity entertainers, and guests, aside from Las Vegas.

On a personal note, while in the company of entertainment industry friends like Peter Lawford, Peter Allen, Terry Lester, Roddy McDowall, Dack Rambo, Phil Capice, Liza Minnelli, Elizabeth Taylor and others, I saw many great entertainments acts at Studio One's Backlot Theater, everyone from Streisand and Eartha Kitt, to Pía Zadora, Patti Brooks, Patti LaBelle, Charo, Lola Falana, Rip Taylor, Charles Nelson Reilly, Sally Kellerman, Phyllis Newman, Lorna Luft, Grace Jones, Thelma Houston, Wayland Flowers, Barbara Cook, Charles Pierce, Joan Rivers, Jim Bailey, Chita Rivera, etc...the list of entertainers I saw perform at the Backlot was extensive, because it was a popular place to perform and to patronize.

It's my fervent hope that you give this preservation issue serious and heartfelt consideration, and not let another piece of iconic West Hollywood history, fade into oblivion or be destroyed.

Sincerely & most gratefully,

Michael Follen

Las Vegas, Nevada

mike.follen@aol.com
702-985-4653

From:	Elisabeth Sandberg
To:	Polanco, Julianne@Parks; Burg, William@Parks; westhollywoodheritageproject@gmail.com
Subject:	The Factory nomination, West Hollywood, CA
Date:	Sunday, October 16, 2016 8:08:58 PM

Dear Commissioners,

I support the nomination of The Factory building in West Hollywood, CA (Mitchell Camera Corp-Studio One/Backlot).

The building is an iconic structure in West Hollywood and the surrounding area. It is a classic Daylight Factory with a history related to the pioneering factory designer and builder Albert and Julius Kahn.

Mitchell Camera Corporation had the building built in 1929 to house their motion picture camera design and manufacture works. While in the building, Mitchell Camera Corp designed and manufactured motion picture cameras that revolutionized filmmaking; giving rise to, at the time, a new film artist called the cinematographer. By 1946, 85% of all movies worldwide were shot on Mitchell cameras. The technology designed at The Factory building was the basis for all motion picture cameras until the introduction of digital in the 1990s.

Scott Forbes opened Studio One disco and the Backlot Theatre in 1974. Prior to Studio One, gay bars were small, windowless, anonymous buildings (in which one entered from the back of the building). The disco filled a vital community need after the Stonewall Riots: it celebrated sexual freedom for gay men and took the gay bar out of the closet, and helped bring gay men out too. Studio One's massive, mainstream influence and success helped bridge the cultural divide between the gay community and the dominant heterosexual society.

The Factory building is an important building and is central to the story/stories of America/Americans. The Factory building is a quintessential American building given its connection to the factory designing/building pioneers that helped create Ford's assembly line, and its pivotal role in movie-making history, and its crucial role in advancing LGBTQ civil rights. The Factory building must be listed on the National Register of Historic Places.

Sincerely,

Elisabeth Sandberg
West Hollywood, CA 90069

From various readings, I understand that the Mitchell Camera Corporation not only is part of the economic growth of what has become West Hollywood but also a reason so many single men came here to work giving rise to a gay population. It is an iconic and versatile structure that merits being listed on the National Register of Historic Places.

From: patsylynch@aol.com
To: Polanco, Julianne@Parks; Burg, William@Parks; westhollywoodheritageproject@gmail.com
Subject: Factory Nomination
Date: Saturday, October 15, 2016 6:21:18 AM

RE: The Factory nomination, West Hollywood, CA

15 October 2016

Dear Commissioners,

I support the nomination of The Factory building in West Hollywood, CA (Mitchell Camera Corp-Studio One/Backlot).
The building is an iconic structure in West Hollywood and the surrounding area. It is a classic Daylight Factory with a history related to the pioneering factory designer and builder Albert and Julius Kahn.

Mitchell Camera Corporation had the building built in 1929 to house their motion picture camera design and manufacture works. While in the building, Mitchell Camera Corp designed and manufactured motion picture cameras that revolutionized filmmaking; giving rise to, at the time, a new film artist called the cinematographer. By 1946, 85% of all movies worldwide were shot on Mitchell cameras. The technology designed at The Factory building was the basis for all motion picture cameras until the introduction of digital in the 1990s.

Scott Forbes opened Studio One disco and the Backlot Theatre in 1974. Prior to Studio One, gay bars were small, windowless, anonymous buildings (in which one entered from the back of the building). The disco filled a vital community need after the Stonewall Riots: it celebrated sexual freedom for gay men and took the gay bar out of the closet, and helped bring gay men out too. Studio One's massive, mainstream influence and success helped bridge the cultural divide between the gay community and the dominant heterosexual society.

The Factory building is an important building and is central to the story/stories of America/Americans. The Factory building is a quintessential American building given its connection to the factory designing/building pioneers that helped create Ford's assembly line, and its pivotal role in movie-making history, and its crucial role in advancing LGBTQ civil rights. The Factory building must be listed on the National Register of Historic Places.

Sincerely,
Patsy Lynch
Glen Echo, MD 20812

From: JAMES ROSEN
To: Polanco, Julianne@Parks; Burg, William@Parks
Subject: The Factory
Date: Friday, October 14, 2016 7:06:31 PM

Dear Commissioners,

I support the nomination of The Factory building in West Hollywood, CA (Mitchell Camera Corp-Studio One/Backlot).

The building is an iconic structure in West Hollywood and the surrounding area. It is a classic Daylight Factory with a history related to the pioneering factory designer and builder Albert and Julius Kahn.

Mitchell Camera Corporation had the building built in 1929 to house their motion picture camera design and manufacture works. While in the building, Mitchell Camera Corp designed and manufactured motion picture cameras that revolutionized filmmaking; giving rise to, at the time, a new film artist called the cinematographer. By 1946, 85% of all movies worldwide were shot on Mitchell cameras. The technology designed at The Factory building was the basis for all motion picture cameras until the introduction of digital in the 1990s.

Scott Forbes opened Studio One disco and the Backlot Theatre in 1974. Prior to Studio One, gay bars were small, windowless, anonymous buildings (in which one entered from the back of the building). The disco filled a vital community need after the Stonewall Riots: it celebrated sexual freedom for gay men and took the gay bar out of the closet, and helped bring gay men out too. Studio One's massive, mainstream influence and success helped bridge the cultural divide between the gay community and the dominant heterosexual society.

The Factory building is an important building and is central to the story/stories of America/Americans. The Factory building is a quintessential American building given its connection to the factory designing/building pioneers that helped create Ford's assembly line, and its pivotal role in movie-making history, and its crucial role in advancing LGBTQ civil rights. The Factory building must be listed on the National Register of Historic Places.

Sincerely,

James Rosen

James Rosen Design LLC
323.314.4588 C
James@jamesrosendesign.com
http://www.jamesrosendesign.com

Confidentiality Note: This e-mail is intended only for the use of addressee(s) named herein and may contain legally privileged information. If you are not the intended recipient of this e-mail, you are hereby notified that any dissemination or copying of this e-mail is strictly prohibited

print only if necessary

https://www.facebook.com/jamesrosendesign/

https://www.instagram.com/jrosendesign/

From: TERESA MCGRATH
To: Polanco, Julianne@Parks; Burg, William@Parks; westhollywoodheritageproject@gmail.com
Subject: The Factory nomination, West Hollywood, CA
Date: Friday, July 29, 2016 9:10:08 AM

Dear Commissioners,

I support the nomination of The Factory building in West Hollywood, CA (Mitchell Camera Corp-Studio One/Backlot).

The building is an iconic structure in West Hollywood and the surrounding area. It is a classic Daylight Factory with a history related to the pioneering factory designer and builder Albert and Julius Kahn.

Mitchell Camera Corporation had the building built in 1929 to house their motion picture camera design and manufacture works. While in the building, Mitchell Camera Corp designed and manufactured motion picture cameras that revolutionized filmmaking; giving rise to, at the time, a new film artist called the cinematographer. By 1946, 85% of all movies worldwide were shot on Mitchell cameras. The technology designed at The Factory building was the basis for all motion picture cameras until the introduction of digital in the 1990s.

Scott Forbes opened Studio One disco and the Backlot Theatre in 1974. Prior to Studio One, gay bars were small, windowless, anonymous buildings (in which one entered from the back of the building). The disco filled a vital community need: it celebrated sexual freedom for gay men. Studio One took the gay bar out of the closet, and helped bring gay men out too. Studio One's massive, mainstream influence and success helped bridge the cultural divide between the gay community and the dominant heterosexual society. And in the AIDS crisis, especially the harrowing early years, the disco helped raise desperately needed money and provided a place of community and hope and strength.

The Factory building is an important building and is central to the story/stories of America/Americans. The Factory building is a quintessential American building given its connection to the factory designing/building pioneers that helped create Ford's assembly line, and its pivotal role in movie-making history, and its crucial role in advancing LGBTQ civil rights. The Factory building must be listed on the National Register of Historic Places.

Sincerely,
Name
teresa mcgrath

portland, oregon

From:	Lael
To:	Polanco, Julianne@Parks; Burg, William@Parks; westhollywoodheritageproject@gmail.com
Subject:	The Factory West Hollywood
Date:	Friday, July 22, 2016 6:47:20 PM

RE: The Factory nomination, West Hollywood, CA

Dear Commissioners,

I support the nomination of The Factory building in West Hollywood, CA (Mitchell Camera Corp-Studio One/Backlot).
The building is an iconic structure in West Hollywood and the surrounding area. It is a classic Daylight Factory with a history related to the pioneering factory designer and builder Albert and Julius Kahn.

Mitchell Camera Corporation had the building built in 1929 to house their motion picture camera design and manufacture works. While in the building, Mitchell Camera Corp designed and manufactured motion picture cameras that revolutionized filmmaking; giving rise to, at the time, a new film artist called the cinematographer. By 1946, 85% of all movies worldwide were shot on Mitchell cameras. The technology designed at The Factory building was the basis for all motion picture cameras until the introduction of digital in the 1990s.

Scott Forbes opened Studio One disco and the Backlot Theatre in 1974. Prior to Studio One, gay bars were small, windowless, anonymous buildings (in which one entered from the back of the building). The disco filled a vital community need: it celebrated sexual freedom for gay men. Studio One took the gay bar out of the closet, and helped bring gay men out too. Studio One's massive, mainstream influence and success helped bridge the cultural divide between the gay community and the dominant heterosexual society. And in the AIDS crisis, especially the harrowing early years, the disco helped raise desperately needed money and provided a place of community and hope and strength.

The Factory building is an important building and is central to the story/stories of America/Americans. The Factory building is a quintessential American building given its connection to the factory designing/building pioneers that helped create Ford's assembly line, and its pivotal role in movie-making history, and its crucial role in advancing LGBTQ civil rights. The Factory building must be listed on the National Register of Historic Places.

Everything that was Old Hollywood is being allowed to be turned to dust. There is not much left. Please stop this.

Sincerely,

Lael M. Ward

West Hollywood, CA

From:	Correia, Jay@Parks
To:	Burg, William@Parks
Subject:	FW: Comments on Mitchell Camera Corporation/Studio One National Register Nomination
Date:	Friday, July 22, 2016 4:07:27 PM
Attachments:	NTHP Support Letter_NR Designation_Mitchell Camera Corp and Studio One_072216.pdf

I don't know why you weren't cc'd....Sorry.

jay

Jay Correia
State Historian III
Supervisor, Registration Unit
California Office of Historic Preservation
916-445-7008

From: Christina Morris [mailto:CMorris@savingplaces.org]
Sent: Friday, July 22, 2016 2:57 PM
To: Correia, Jay@Parks; Polanco, Julianne@Parks
Cc: Crain, Amy@Parks; Linda Dishman; Adrian Scott Fine; Krisy Gosney; Kate Eggert; Richard Adkins
Subject: Comments on Mitchell Camera Corporation/Studio One National Register Nomination

Mr. Correia - Please see the attached comment letter from the LA Office of the National Trust for Historic Preservation regarding the State Historic Resources Commission's upcoming review of a National Register nomination for the Mitchell Camera Corporation/Studio One in West Hollywood. I hope you can distribute this letter to Chair Brandes and the Commission members in advance of their July 29 meeting.
Please let me know if you have any questions. Thank you for your assistance.

Chris Morris | FIELD DIRECTOR
c 213-705-7122
NATIONAL TRUST FOR HISTORIC PRESERVATION
Los Angeles Field Office
WE ARE TRANSITIONING INTO NEW OFFICE SPACE!
The National Trust LA Field Office staff will be working off-site during this transition.
More information to come regarding our new location.
SavingPlaces.org

From: SJH
To: Polanco, Julianne@Parks; Burg, William@Parks
Cc: westhollywoodheritageproject@gmail.com; info@westhollywoodpreservationalliance.org
Subject: Nomination of The Factory, West Hollywood, CA
Date: Friday, July 22, 2016 3:29:43 PM

Dear Ms. Polanco,

I send this letter in full support of the nomination of the structure in West Hollywood, CA, known as The Factory. The structure itself is the last of its kind in our city and as you know from the nomination it has a rich cultural and societal history connecting it to the film industry as well as the early story of LGBTQ community in West Hollywood.

I represent a growing number of history enthusiasts in my community who are interested in preserving what we can for future generations, whenever prudent.

When The Factory comes before the State Historical Resources Commission next month, I would urge the commissioners to support the nomination and designate this important site.

With great respect for all you do,

Stephanie J. Harker
Co-founder, Protect Plummer Park, (Great Hall/Long Hall)
Founding Member, West Hollywood Preservation Alliance
1139 N. Vista St.
West Hollywood, CA 90046
310-985-4723

From:	Simone Gad
To:	Burg, William@Parks
Subject:	Fwd: SAVING THE FACTORY IN WEST HOLLYWOOD
Date:	Friday, July 22, 2016 12:40:12 PM

Please do not destroy the FACTORY in West Hollywood and grant it Historical building. Sincerely, Simone Gad-resident in Los Angeles since 1951

---------- Forwarded message ----------
From: Simone Gad <simonegad.gad1@gmail.com>
Date: Fri, Jul 22, 2016 at 12:38 PM
Subject: SAVING THE FACTORY IN WEST HOLLYWOOD
To: william.berg@parks.ca.gov, julianne.polanco@parks.ca.gov, westhollywoodheritageproject@gmail.com

This is an iconic building-please don't destroy it-it needs to be protected as part of Los Angeles/West Hollywood history. Sincerely, Ms Simone Gad-a resident since 1951.

From: Steven Byrket
To: Polanco, Julianne@Parks; Burg, William@Parks; westhollywoodheritageproject@gmail.com
Subject: Save The Factory
Date: Friday, July 22, 2016 8:41:50 AM

Dear Commissioners,

I support the nomination of The Factory building in West Hollywood, CA (Mitchell Camera Corp-Studio One/Backlot).
The building is an iconic structure in West Hollywood and the surrounding area. It is a classic Daylight Factory with a history related to the pioneering factory designer and builder Albert and Julius Kahn.

Mitchell Camera Corporation had the building built in 1929 to house their motion picture camera design and manufacture works. While in the building, Mitchell Camera Corp designed and manufactured motion picture cameras that revolutionized filmmaking; giving rise to, at the time, a new film artist called the cinematographer. By 1946, 85% of all movies worldwide were shot on Mitchell cameras. The technology designed at The Factory building was the basis for all motion picture cameras until the introduction of digital in the 1990s.

Scott Forbes opened Studio One disco and the Backlot Theatre in 1974. Prior to Studio One, gay bars were small, windowless, anonymous buildings (in which one entered from the back of the building). The disco filled a vital community need: it celebrated sexual freedom for gay men. Studio One took the gay bar out of the closet, and helped bring gay men out too. Studio One's massive, mainstream influence and success helped bridge the cultural divide between the gay community and the dominant heterosexual society. And in the AIDS crisis, especially the harrowing early years, the disco helped raise desperately needed money and provided a place of community and hope and strength.

The Factory building is an important building and is central to the story/stories of America/Americans. The Factory building is a quintessential American building given its connection to the factory designing/building pioneers that helped create Ford's assembly line, and its pivotal role in movie-making history, and its crucial role in advancing LGBTQ civil rights. The Factory building must be listed on the National Register of Historic Places.

Sincerely,

Steven Byrket
West Hollywood, CA

From:	Mary Mallory
To:	Polanco, Julianne@Parks; Burg, William@Parks; westhollywoodheritageproject@gmail.com
Subject:	Save the Factory in West Holllywood
Date:	Thursday, July 21, 2016 11:11:44 PM

Dear Commissioners,

I wholeheartedly support the National Historic Landmark nomination of The Factory building in West Hollywood, CA because it is a factory to dreams, both physically and psychologically, housing both the Mitchell Camera Corp and one of the most important gay bars in Los Angeles/Hollywood, Studio One/Backlot. It is iconic both for its architecture and for its history, as a design of factory architect and builders Albert and Julius Kahn.

Built in 1928 to house the Mitchell Camera Corporation, the factory housed their design, manufacturing, and office works. While in the building, Mitchell Camera Corp designed and manufactured motion picture cameras that revolutionized filmmaking and were used to shoot some of the most iconic films in cinematic history. By 1946, 85% of all movies worldwide were shot on Mitchell cameras. The technology designed at The Factory building was the basis for all motion picture cameras until the introduction of digital in the 1990s.

Studio One disco and Backlot Theatre, opened here by Scott Forbes in 1974, took gay bars out of the closet, celebrating the gay community and freedom to live freely and openly as gay men. It boldly and proudly announced that being gay was okay. Preserving and recognizing landmarks of LGBTQ history is incredibly important, showing the opening up and inclusiveness of society. This revolutionary time in American history is deserving of recognition and preservation.

The Factory building is an important building and is central to the story/stories of America/Americans. The Factory building is a quintessential American building given its connection to the factory designing/building pioneers that helped create Ford's assembly line, and its pivotal role in movie-making history, and its crucial role in advancing LGBTQ civil rights. The Factory building must be listed on the National Register of Historic Places.

Sincerely,

Mary Mallory

From:	Cole Ettman
To:	Polanco, Julianne@Parks; Burg, William@Parks; westhollywoodheritageproject@gmail.com
Subject:	The Factory, West Hollywood
Date:	Thursday, July 21, 2016 12:46:10 PM

Dear Commissioners,

As a former Public Facilities Commissioner in the City of West Hollywood, I urge you to support the nomination of The Factory building in West Hollywood, CA (Mitchell Camera Corp-Studio One/Backlot).

The building is an iconic structure in West Hollywood and the surrounding area. It is a classic Daylight Factory with a history related to the pioneering factory designer and builder Albert and Julius Kahn.

Mitchell Camera Corporation had the building built in 1929 to house their motion picture camera design and manufacture works. While in the building, Mitchell Camera Corp designed and manufactured motion picture cameras that revolutionized filmmaking; giving rise to, at the time, a new film artist called the cinematographer. By 1946, 85% of all movies worldwide were shot on Mitchell cameras. The technology designed at The Factory building was the basis for all motion picture cameras until the introduction of digital in the 1990s.

Scott Forbes opened Studio One disco and the Backlot Theatre in 1974. Prior to Studio One, gay bars were small, windowless, anonymous buildings (in which one entered from the back of the building). The disco filled a vital community need: it celebrated sexual freedom for gay men. Studio One took the gay bar out of the closet, and helped bring gay men out too. Studio One's massive, mainstream influence and success helped bridge the cultural divide between the gay community and the dominant heterosexual society. And in the AIDS crisis, especially the harrowing early years, the disco helped raise desperately needed money and provided a place of community and hope and strength.

The Factory building is an important building and is central to the story/stories of America/Americans. The Factory building is a quintessential American building given its connection to the factory designing/building pioneers that helped create Ford's assembly line, and its pivotal role in movie-making history, and its crucial role in advancing LGBTQ civil rights. The Factory building must be listed on the National Register of Historic Places.

Sincerely,

Cole Ettman

West Hollywood, CA

From:	Lloyd Coleman
To:	Polanco, Julianne@Parks; Burg, William@Parks; westhollywoodheritageproject@gmail.com
Subject:	The Factory nomination, West Hollywood, CA
Date:	Wednesday, July 20, 2016 2:48:05 PM

RE: The Factory nomination, West Hollywood, CA

Dear Commissioners,

I support the nomination of The Factory building in West Hollywood, CA (Mitchell Camera Corp-Studio One/Backlot).
The building is an iconic structure in West Hollywood and the surrounding area. It is a classic Daylight Factory with a history related to the pioneering factory designer and builder Albert and Julius Kahn.

Mitchell Camera Corporation had the building built in 1929 to house their motion picture camera design and manufacture works. While in the building, Mitchell Camera Corp designed and manufactured motion picture cameras that revolutionized filmmaking; giving rise to, at the time, a new film artist called the cinematographer. By 1946, 85% of all movies worldwide were shot on Mitchell cameras. The technology designed at The Factory building was the basis for all motion picture cameras until the introduction of digital in the 1990s.

Scott Forbes opened Studio One disco and the Backlot Theatre in 1974. Prior to Studio One, gay bars were small, windowless, anonymous buildings (in which one entered from the back of the building). The disco filled a vital community need: it celebrated sexual freedom for gay men. Studio One took the gay bar out of the closet, and helped bring gay men out too. Studio One's massive, mainstream influence and success helped bridge the cultural divide between the gay community and the dominant heterosexual society. And in the AIDS crisis, especially the harrowing early years, the disco helped raise desperately needed money and provided a place of community and hope and strength.

The Factory building is an important building and is central to the story/stories of America/Americans. The Factory building is a quintessential American building given its connection to the factory designing/building pioneers that helped create Ford's assembly line, and its pivotal role in movie-making history, and its crucial role in advancing LGBTQ civil rights. The Factory building must be listed on the National Register of Historic Places.

Sincerely,
Lloyd Coleman

2601 E Ocean Blvd
Long Beach, CA 90803

From:	Peter Fields
To:	Polanco, Julianne@Parks; Burg, William@Parks; westhollywoodheritageproject@gmail.com
Subject:	The Factory nomination, West Hollywood, CA
Date:	Wednesday, July 20, 2016 7:50:40 AM

Dear Commissioners,

I support the nomination of The Factory building in West Hollywood, CA (Mitchell Camera Corp-Studio One/Backlot).

The building is an iconic structure in West Hollywood and the surrounding area. It is a classic Daylight Factory with a history related to the pioneering factory designer and builder Albert and Julius Kahn.

Mitchell Camera Corporation had the building built in 1929 to house their motion picture camera design and manufacture works. While in the building, Mitchell Camera Corp designed and manufactured motion picture cameras that revolutionized film making; giving rise to, at the time, a new film artist called the cinematographer. By 1946, 85% of all movies worldwide were shot on Mitchell cameras. The technology designed at The Factory building was the basis for all motion picture cameras until the introduction of digital in the 1990s.

Scott Forbes opened Studio One disco and the Backlot Theatre in 1974. Prior to Studio One, gay bars were small, windowless, anonymous buildings (in which one entered from the back of the building). The disco filled a vital community need: it celebrated sexual freedom for gay men. Studio One took the gay bar out of the closet, and helped bring gay men out too. Studio One's massive, mainstream influence and success helped bridge the cultural divide between the gay community and the dominant heterosexual society. And in the AIDS crisis, especially the harrowing early years, the disco helped raise desperately needed money and provided a place of community and hope and strength.

The Factory building is an important building and is central to the story/stories of America/Americans. The Factory building is a quintessential American building given its connection to the factory designing/building pioneers that helped create Ford's assembly line, and its pivotal role in movie-making history, and its crucial role in advancing LGBTQ civil rights. The Factory building must be listed on the National Register of Historic Places.

Sincerely,
Peter Fields
Pasadena, CA

From: RFK
To: Polanco, Julianne@Parks; Burg, William@Parks; westhollywoodheritageproject@gmail.com
Subject: The Factory nomination, West Hollywood, CA
Date: Tuesday, July 19, 2016 7:31:09 PM

Dear Commissioners,

I strongly support the nomination of The Factory building in West Hollywood, CA (Mitchell Camera Corp-Studio One/Backlot). The building is an iconic structure in West Hollywood and the surrounding area. It is a classic Daylight Factory with a history related to the pioneering factory designer and builder Albert and Julius Kahn.

Mitchell Camera Corporation had the building built in 1929 to house their motion picture camera design and manufacture works. While in the building, Mitchell Camera Corp designed and manufactured motion picture cameras that revolutionized filmmaking; giving rise to, at the time, a new film artist called the cinematographer. By 1946, 85% of all movies worldwide were shot on Mitchell cameras. The technology designed at The Factory building was the basis for all motion picture cameras until the introduction of digital in the 1990s.

Scott Forbes opened Studio One disco and the Backlot Theatre in 1974. Prior to Studio One, gay bars were small, windowless, anonymous buildings (in which one entered from the back of the building). The disco filled a vital community need: it celebrated sexual freedom for gay men. Studio One took the gay bar out of the closet, and helped bring gay men out too. Studio One's massive, mainstream influence and success helped bridge the cultural divide between the gay community and the dominant heterosexual society. And in the AIDS crisis, especially the harrowing early years, the disco helped raise desperately needed money and provided a place of community and hope and strength.

The Factory building is an important building and is central to the story/stories of America/Americans. The Factory building is a quintessential American building given its connection to the factory designing/building pioneers that helped create Ford's assembly line, and its pivotal role in movie-making history, and its crucial role in advancing LGBTQ civil rights. The Factory building simply must be listed on the National Register of Historic Places.

Sincerely,
Robert F. Krumpholz IV
West Hollywood, CA

From: Amber
To: Polanco, Julianne@Parks; Burg, William@Parks; westhollywoodheritageproject@gmail.com
Subject: RE: The Factory nomination, West Hollywood, CA
Date: Monday, July 18, 2016 10:34:14 AM

RE: The Factory nomination, West Hollywood, CA

Dear Commissioners,

I support the nomination of The Factory building in West Hollywood, CA (Mitchell Camera Corp-Studio One/Backlot). It an important part of the history of this city as a hub of film production.
The building is an iconic structure in West Hollywood and the surrounding area. It is a classic Daylight Factory with a history related to the pioneering factory designer and builder Albert and Julius Kahn.

Mitchell Camera Corporation had the building built in 1929 to house their motion picture camera design and manufacture works. While in the building, Mitchell Camera Corp designed and manufactured motion picture cameras that revolutionized filmmaking; giving rise to, at the time, a new film artist called the cinematographer. By 1946, 85% of all movies worldwide were shot on Mitchell cameras. The technology designed at The Factory building was the basis for all motion picture cameras until the introduction of digital in the 1990s.

Scott Forbes opened Studio One disco and the Backlot Theatre in 1974. Prior to Studio One, gay bars were small, windowless, anonymous buildings (in which one entered from the back of the building). The disco filled a vital community need: it celebrated sexual freedom for gay men. Studio One took the gay bar out of the closet, and helped bring gay men out too. Studio One's massive, mainstream influence and success helped bridge the cultural divide between the gay community and the dominant heterosexual society. And in the AIDS crisis, especially the harrowing early years, the disco helped raise desperately needed money and provided a place of community and hope and strength.

The Factory building is an important building and is central to the story/stories of America/Americans. The Factory building is a quintessential American building given its connection to the factory designing/building pioneers that helped create Ford's assembly line, and its pivotal role in movie-making history, and its crucial role in advancing LGBTQ civil rights. The Factory building must be listed on the National Register of Historic Places.

Sincerely,

Amber Cannon
Los Angeles, CA

From: Jeffrey1054
To: Polanco, Julianne@Parks; Burg, William@Parks
Subject: The Factory nomination, West Hollywood, CA
Date: Sunday, July 17, 2016 1:55:56 PM

Dear Commissioners,

I support the nomination of The Factory building in West Hollywood, CA (Mitchell Camera Corp-Studio One/Backlot).
The building is an iconic structure in West Hollywood and the surrounding area. It is a classic Daylight Factory with a history related to the pioneering factory designer and builder Albert and Julius Kahn.

Mitchell Camera Corporation had the building built in 1929 to house their motion picture camera design and manufacture works. While in the building, Mitchell Camera Corp designed and manufactured motion picture cameras that revolutionized filmmaking; giving rise to, at the time, a new film artist called the cinematographer. By 1946, 85% of all movies worldwide were shot on Mitchell cameras. The technology designed at The Factory building was the basis for all motion picture cameras until the introduction of digital in the 1990s.

Scott Forbes opened Studio One disco and the Backlot Theatre in 1974. Prior to Studio One, gay bars were small, windowless, anonymous buildings (in which one entered from the back of the building). The disco filled a vital community need: it celebrated sexual freedom for gay men. Studio One took the gay bar out of the closet, and helped bring gay men out too. Studio One's massive, mainstream influence and success helped bridge the cultural divide between the gay community and the dominant heterosexual society. And in the AIDS crisis, especially the harrowing early years, the disco helped raise desperately needed money and provided a place of community and hope and strength.

The Factory building is an important building and is central to the story/stories of America/Americans. The Factory building is a quintessential American building given its connection to the factory designing/building pioneers that helped create Ford's assembly line, and its pivotal role in movie-making history, and its crucial role in advancing LGBTQ civil rights. The Factory building must be listed on the National Register of Historic Places.

Sincerely,

Jeff Lambert

Lawndale, Ca

From:	Jeff Hiner
To:	Polanco, Julianne@Parks; Burg, William@Parks
Cc:	westhollywoodheritageproject@gmail.com
Subject:	The Factory nomination, West Hollywood, CA
Date:	Sunday, July 17, 2016 10:19:10 AM

Dear Commissioners,

I support the nomination of The Factory building in West Hollywood, CA (Mitchell Camera Corp-Studio One/Backlot).

The building is an iconic structure in West Hollywood and the surrounding area. It is a classic Daylight Factory with a history related to the pioneering factory designer and builder Albert and Julius Kahn.

Mitchell Camera Corporation had the building built in 1929 to house their motion picture camera design and manufacture works. While in the building, Mitchell Camera Corp designed and manufactured motion picture cameras that revolutionized filmmaking; giving rise to, at the time, a new film artist called the cinematographer. By 1946, 85% of all movies worldwide were shot on Mitchell cameras. The technology designed at The Factory building was the basis for all motion picture cameras until the introduction of digital in the 1990s.

Scott Forbes opened Studio One disco and the Backlot Theatre in 1974. Prior to Studio One, gay bars were small, windowless, anonymous buildings (in which one entered from the back of the building). The disco filled a vital community need: it celebrated sexual freedom for gay men. Studio One took the gay bar out of the closet, and helped bring gay men out too. Studio One's massive, mainstream influence and success helped bridge the cultural divide between the gay community and the dominant heterosexual society. And in the AIDS crisis, especially the harrowing early years, the disco helped raise desperately needed money and provided a place of community and hope and strength.

The Factory building is an important building and is central to the story/stories of America/Americans. The Factory building is a quintessential American building given its connection to the factory designing/building pioneers that helped create Ford's assembly line, and its pivotal role in movie-making history, and its crucial role in advancing LGBTQ civil rights. The Factory building must be listed on the National Register of Historic Places.

Sincerely,

Jeff Hiner

From:	JOHN VANCE
To:	Polanco, Julianne@Parks; Burg, William@Parks; westhollywoodheritageproject@gmail.com
Subject:	RE: The Factory nomination, West Hollywood, CA
Date:	Friday, July 15, 2016 5:25:43 PM

Dear Commissioners,

I support the nomination of The Factory building in West Hollywood, CA (Mitchell Camera Corp-Studio One/Backlot).
The building is an iconic structure in West Hollywood and the surrounding area. It is a classic Daylight Factory with a history related to the pioneering factory designer and builder Albert and Julius Kahn.

Mitchell Camera Corporation had the building built in 1929 to house their motion picture camera design and manufacture works. While in the building, Mitchell Camera Corp designed and manufactured motion picture cameras that revolutionized filmmaking; giving rise to, at the time, a new film artist called the cinematographer. By 1946, 85% of all movies worldwide were shot on Mitchell cameras. The technology designed at The Factory building was the basis for all motion picture cameras until the introduction of digital in the 1990s.

Scott Forbes opened Studio One disco and the Backlot Theatre in 1974. Prior to Studio One, gay bars were small, windowless, anonymous buildings (in which one entered from the back of the building). The disco filled a vital community need: it celebrated sexual freedom for gay men. Studio One took the gay bar out of the closet, and helped bring gay men out too. Studio One's massive, mainstream influence and success helped bridge the cultural divide between the gay community and the dominant heterosexual society. And in the AIDS crisis, especially the harrowing early years, the disco helped raise desperately needed money and provided a place of community and hope and strength.

The Factory building is an important building and is central to the story/stories of America/Americans. The Factory building is a quintessential American building given its connection to the factory designing/building pioneers that helped create Ford's assembly line, and its pivotal role in movie-making history, and its crucial role in advancing LGBTQ civil rights. The Factory building must be listed on the National Register of Historic Places.

Sincerely,

John Vance
West Hollywood, CA

From: Jamie AOL
To: Polanco, Julianne@Parks; Burg, William@Parks
Subject: RE: The Factory nomination, West Hollywood, CA
Date: Friday, July 15, 2016 3:18:59 PM

Dear Commissioners,

I support the nomination of The Factory building in West Hollywood, CA (Mitchell Camera Corp-Studio One/Backlot).
The building is an iconic structure in West Hollywood and the surrounding area. It is a classic Daylight Factory with a history related to the pioneering factory designer and builder Albert and Julius Kahn.

Mitchell Camera Corporation had the building built in 1929 to house their motion picture camera design and manufacture works. While in the building, Mitchell Camera Corp designed and manufactured motion picture cameras that revolutionized filmmaking; giving rise to, at the time, a new film artist called the cinematographer. By 1946, 85% of all movies worldwide were shot on Mitchell cameras. The technology designed at The Factory building was the basis for all motion picture cameras until the introduction of digital in the 1990s.

Scott Forbes opened Studio One disco and the Backlot Theatre in 1974. Prior to Studio One, gay bars were small, windowless, anonymous buildings (in which one entered from the back of the building). The disco filled a vital community need: it celebrated sexual freedom for gay men. Studio One took the gay bar out of the closet, and helped bring gay men out too. Studio One's massive, mainstream influence and success helped bridge the cultural divide between the gay community and the dominant heterosexual society. And in the AIDS crisis, especially the harrowing early years, the disco helped raise desperately needed money and provided a place of community and hope and strength.

The Factory building is an important building and is central to the story/stories of America/Americans. The Factory building is a quintessential American building given its connection to the factory designing/building pioneers that helped create Ford's assembly line, and its pivotal role in movie-making history, and its crucial role in advancing LGBTQ civil rights. The Factory building must be listed on the National Register of Historic Places.

Sincerely,

James Waese
8971 Keith Avenue
West Hollywood
CA

From: Lois Common-Denominator
To: Polanco, Julianne@Parks; Burg, William@Parks; westhollywoodheritageproject@gmail.com
Subject: RE: The Factory nomination, West Hollywood, CA
Date: Friday, July 15, 2016 12:29:44 PM

RE: The Factory nomination, West Hollywood, CA

Dear Commissioners

I support the nomination of The Factory building in West Hollywood, CA (Mitchell Camera Corp-Studio One/Backlot). The building is an iconic structure in West Hollywood and the surrounding area. It is a classic Daylight Factory with a history related to the pioneering factory designer and builder Albert and Julius Kahn.

Mitchell Camera Corporation had the building built in 1929 to house their motion picture camera design and manufacture works. While in the building, Mitchell Camera Corp designed and manufactured motion picture cameras that revolutionized film-making; giving rise to, at the time, a new film artist called the cinematographer. By 1946, 85% of all movies worldwide were shot on Mitchell cameras. The technology designed at The Factory building was the basis for all motion picture cameras until the introduction of digital in the 1990s.

Scott Forbes opened Studio One disco and the Backlot Theatre in 1974. Prior to Studio One, gay bars were small, windowless, anonymous buildings (in which one entered from the back of the building). The disco filled a vital community need: it celebrated sexual freedom for gay men. Studio One took the gay bar out of the closet, and helped bring gay men out too. Studio One’s massive, mainstream influence and success helped bridge the cultural divide between the gay community and the dominant heterosexual society. And in the AIDS crisis, especially the harrowing early years, the disco helped raise desperately needed money and provided a place of community and hope and strength.

The Factory building is an important building and is central to the story/stories of America/Americans. The Factory building is a quintessential American building given its connection to the factory designing/building pioneers that helped create Ford’s assembly line, and its pivotal role in movie-making history, and its crucial role in advancing LGBTQ civil rights. The Factory building must be listed on the National Register of Historic Places.

Sincerely
Julian Davies
West Hollywood, CA

From:	Todd McFadden
To:	Polanco, Julianne@Parks; Burg, William@Parks; westhollywoodheritageproject@gmail.com
Cc:	joe@dunton.com
Subject:	The Factory Building, West Hollywood
Date:	Friday, July 15, 2016 12:04:26 PM
Attachments:	Factory Building Preservation.docx

Please see the attached letter in support of the preservation of the Factory building in West Hollywood.

Thank You,
Joe Dunton

From:	Karl Vangelisti
To:	Polanco, Julianne@Parks; Burg, William@Parks; westhollywoodheritageproject@gmail.com
Subject:	RE: The Factory nomination, West Hollywood, CA
Date:	Friday, July 15, 2016 10:19:05 AM

Dear Commissioners,

I support the nomination of The Factory building in West Hollywood, CA (Mitchell Camera Corp-Studio One/Backlot).
The building is an iconic structure in West Hollywood and the surrounding area. It is a classic Daylight Factory with a history related to the pioneering factory designer and builder Albert and Julius Kahn.

Mitchell Camera Corporation had the building built in 1929 to house their motion picture camera design and manufacture works. While in the building, Mitchell Camera Corp designed and manufactured motion picture cameras that revolutionized filmmaking; giving rise to, at the time, a new film artist called the cinematographer. By 1946, 85% of all movies worldwide were shot on Mitchell cameras. The technology designed at The Factory building was the basis for all motion picture cameras until the introduction of digital in the 1990s.

Scott Forbes opened Studio One disco and the Backlot Theatre in 1974. Prior to Studio One, gay bars were small, windowless, anonymous buildings (in which one entered from the back of the building). The disco filled a vital community need: it celebrated sexual freedom for gay men. Studio One took the gay bar out of the closet, and helped bring gay men out too. Studio One's massive, mainstream influence and success helped bridge the cultural divide between the gay community and the dominant heterosexual society. And in the AIDS crisis, especially the harrowing early years, the disco helped raise desperately needed money and provided a place of community and hope and strength.

The Factory building is an important building and is central to the story/stories of America/Americans. The Factory building is a quintessential American building given its connection to the factory designing/building pioneers that helped create Ford's assembly line, and its pivotal role in movie-making history, and its crucial role in advancing LGBTQ civil rights. The Factory building must be listed on the National Register of Historic Places.

Sincerely,

Karl Vangelisti
Los Angeles, CA

From: Celeste Hong
To: Burg, William@Parks
Subject: RE: The Factory nomination, West Hollywood, CA
Date: Thursday, July 14, 2016 3:46:07 PM

Dear Commissioners,

I support the nomination of The Factory building in West Hollywood, CA (Mitchell Camera Corp-Studio One/Backlot).

The building is an iconic structure in West Hollywood and the surrounding area. It is a classic Daylight Factory with a history related to the pioneering factory designer and builder Albert and Julius Kahn.

Mitchell Camera Corporation had the building built in 1929 to house their motion picture camera design and manufacture works. While in the building, Mitchell Camera Corp designed and manufactured motion picture cameras that revolutionized filmmaking; giving rise to, at the time, a new film artist called the cinematographer. By 1946, 85% of all movies worldwide were shot on Mitchell cameras. The technology designed at The Factory building was the basis for all motion picture cameras until the introduction of digital in the 1990s.

Scott Forbes opened Studio One disco and the Backlot Theatre in 1974. Prior to Studio One, gay bars were small, windowless, anonymous buildings (in which one entered from the back of the building). The disco filled a vital community need: it celebrated sexual freedom for gay men. Studio One took the gay bar out of the closet, and helped bring gay men out too. Studio One's massive, mainstream influence and success helped bridge the cultural divide between the gay community and the dominant heterosexual society. And in the AIDS crisis, especially the harrowing early years, the disco helped raise desperately needed money and provided a place of community and hope and strength.

The Factory building is an important building and is central to the story/stories of America/Americans. The Factory building is a quintessential American building given its connection to the factory designing/building pioneers that helped create Ford's assembly line, and its pivotal role in movie-making history, and its crucial role in advancing LGBTQ civil rights. The Factory building must be listed on the National Register of Historic Places.

Sincerely,

Celeste Hong

Los Angeles, CA

From:	Andrea Bardack
To:	Polanco, Julianne@Parks; Burg, William@Parks; westhollywoodheritageproject@gmail.com
Subject:	The Factory nomination, West Hollywood, CA
Date:	Thursday, July 14, 2016 12:08:47 PM

Dear Commissioners,

I support the nomination of The Factory building in West Hollywood, CA (Mitchell Camera Corp-Studio One/Backlot).

The building is an iconic structure in West Hollywood and the surrounding area. It is a classic Daylight Factory with a history related to the pioneering factory designer and builder Albert and Julius Kahn.

Mitchell Camera Corporation had the building built in 1929 to house their motion picture camera design and manufacture works. While in the building, Mitchell Camera Corp designed and manufactured motion picture cameras that revolutionized filmmaking; giving rise to, at the time, a new film artist called the cinematographer. By 1946, 85% of all movies worldwide were shot on Mitchell cameras. The technology designed at The Factory building was the basis for all motion picture cameras until the introduction of digital in the 1990s.

Scott Forbes opened Studio One disco and the Backlot Theatre in 1974. Prior to Studio One, gay bars were small, windowless, anonymous buildings (in which one entered from the back of the building). The disco filled a vital community need: it celebrated sexual freedom for gay men. Studio One took the gay bar out of the closet, and helped bring gay men out too. Studio One's massive, mainstream influence and success helped bridge the cultural divide between the gay community and the dominant heterosexual society. And in the AIDS crisis, especially the harrowing early years, the disco helped raise desperately needed money and provided a place of community and hope and strength.

The Factory building is an important building and is central to the story/stories of America/Americans. The Factory building is a quintessential American building given its connection to the factory designing/building pioneers that helped create Ford's assembly line, and its pivotal role in movie-making history, and its crucial role in advancing LGBTQ civil rights. The Factory building must be listed on the National Register of Historic Places.

Let's please save important historical buildings before it is too late. As a life long LA resident I appreciate the landmarks that help define the city and that made it what it is today.

Sincerely,

Andrea Bardack

Los Angeles, CA

From:	jblockesq@gmail.com
To:	Polanco, Julianne@Parks; Burg, William@Parks
Cc:	West Hollywood Heritage Project
Subject:	Nomination Support Letter
Date:	Thursday, July 14, 2016 10:22:51 AM

Dear Commissioners,

I support the nomination of The Factory building in West Hollywood, CA (Mitchell Camera Corp-Studio One/Backlot), for listing on the National Register of Historic Places.

The building is an iconic structure in West Hollywood and the surrounding area. It is a classic Daylight Factory with a history related to the pioneering factory designer and builder Albert and Julius Kahn.

Mitchell Camera Corporation had the building built in 1929 to house their motion picture camera design and manufacture works. While in the building, Mitchell Camera Corp designed and manufactured motion picture cameras that revolutionized filmmaking; giving rise to, at the time, a new film artist called the cinematographer. By 1946, 85% of all movies worldwide were shot on Mitchell cameras. The technology designed at The Factory building was the basis for all motion picture cameras until the introduction of digital in the 1990s.

Scott Forbes opened Studio One disco and the Backlot Theatre in 1974. Prior to Studio One, gay bars were small, windowless, anonymous buildings (in which one entered from the back of the building). The disco filled a vital community need: it celebrated sexual freedom for gay men. Studio One took the gay bar out of the closet, and helped bring gay men out too. Studio One's massive, mainstream influence and success helped bridge the cultural divide between the gay community and the dominant heterosexual society. And in the AIDS crisis, especially the harrowing early years, the disco helped raise desperately needed money and provided a place of community and hope and strength.

The Factory building is an important building and is central to the story/stories of America/Americans. The Factory building is a quintessential American building given its connection to the factory designing/building pioneers that helped create Ford's assembly line, and its pivotal role in movie-making history, and its crucial role in advancing LGBTQ civil rights. The Factory building must be listed on the National Register of Historic Places.

Sincerely,

Justine Block

West Hollywood, CA

Sent from my iPhone

From:	Kris Hurst
To:	Polanco, Julianne@Parks; Burg, William@Parks; westhollywoodheritageproject@gmail.com
Subject:	RE: The Factory nomination, West Hollywood, CA
Date:	Wednesday, July 13, 2016 11:53:16 PM

Dear Commissioners,

I support the nomination of The Factory building in West Hollywood, CA (Mitchell Camera Corp-Studio One/Backlot).
The building is an iconic structure in West Hollywood and the surrounding area. It is a classic Daylight Factory with a history related to the pioneering factory designer and builder Albert and Julius Kahn.

Mitchell Camera Corporation had the building built in 1929 to house their motion picture camera design and manufacture works. While in the building, Mitchell Camera Corp designed and manufactured motion picture cameras that revolutionized filmmaking; giving rise to, at the time, a new film artist called the cinematographer. By 1946, 85% of all movies worldwide were shot on Mitchell cameras. The technology designed at The Factory building was the basis for all motion picture cameras until the introduction of digital in the 1990s.

Scott Forbes opened Studio One disco and the Backlot Theatre in 1974. Prior to Studio One, gay bars were small, windowless, anonymous buildings (in which one entered from the back of the building). The disco filled a vital community need: it celebrated sexual freedom for gay men. Studio One took the gay bar out of the closet, and helped bring gay men out too. Studio One's massive, mainstream influence and success helped bridge the cultural divide between the gay community and the dominant heterosexual society. And in the AIDS crisis, especially the harrowing early years, the disco helped raise desperately needed money and provided a place of community and hope and strength.

The Factory building is an important building and is central to the story/stories of America/Americans. The Factory building is a quintessential American building given its connection to the factory designing/building pioneers that helped create Ford's assembly line, and its pivotal role in movie-making history, and its crucial role in advancing LGBTQ civil rights. The Factory building must be listed on the National Register of Historic Places.

Sincerely,

Kris Hurst
West Hollywood, California

From: Scott Thomas
To: Polanco, Julianne@Parks; Burg, William@Parks; westhollywoodheritageproject@gmail.com
Subject: The Factory Bldg, West Hollywood, CA
Date: Wednesday, July 13, 2016 9:56:10 PM

RE: The Factory nomination, West Hollywood, CA

Dear Commissioners,

I support the nomination of The Factory building in West Hollywood, CA (Mitchell Camera Corp-Studio One/Backlot).
The building is an iconic structure in West Hollywood and the surrounding area. It is a classic Daylight Factory with a history related to the pioneering factory designer and builder Albert and Julius Kahn.

Mitchell Camera Corporation had the building built in 1929 to house their motion picture camera design and manufacture works. While in the building, Mitchell Camera Corp designed and manufactured motion picture cameras that revolutionized filmmaking; giving rise to, at the time, a new film artist called the cinematographer. By 1946, 85% of all movies worldwide were shot on Mitchell cameras. The technology designed at The Factory building was the basis for all motion picture cameras until the introduction of digital in the 1990s.

Scott Forbes opened Studio One disco and the Backlot Theatre in 1974. Prior to Studio One, gay bars were small, windowless, anonymous buildings (in which one entered from the back of the building). The disco filled a vital community need: it celebrated sexual freedom for gay men. Studio One took the gay bar out of the closet, and helped bring gay men out too. Studio One's massive, mainstream influence and success helped bridge the cultural divide between the gay community and the dominant heterosexual society. And in the AIDS crisis, especially the harrowing early years, the disco helped raise desperately needed money and provided a place of community and hope and strength.

The Factory building is an important building and is central to the story/stories of America/Americans. The Factory building is a quintessential American building given its connection to the factory designing/building pioneers that helped create Ford's assembly line, and its pivotal role in movie-making history, and its crucial role in advancing LGBTQ civil rights. The Factory building must be listed on the National Register of Historic Places.

Sincerely,

Scott Thomas

4033 W. Sunset Blvd. #14

Los Angeles, CA 90029

From: michael ceballos
To: Polanco, Julianne@Parks; Burg, William@Parks; westhollywoodheritageproject@gmail.com
Subject: RE: The Factory nomination, West Hollywood, CA
Date: Wednesday, July 13, 2016 9:49:30 PM

Dear Commissioners,

I support the nomination of The Factory building in West Hollywood, CA (Mitchell Camera Corp-Studio One/Backlot).
The building is an iconic structure in West Hollywood and the surrounding area. It is a classic Daylight Factory with a history related to the pioneering factory designer and builder Albert and Julius Kahn.

Mitchell Camera Corporation had the building built in 1929 to house their motion picture camera design and manufacture works. While in the building, Mitchell Camera Corp designed and manufactured motion picture cameras that revolutionized filmmaking; giving rise to, at the time, a new film artist called the cinematographer. By 1946, 85% of all movies worldwide were shot on Mitchell cameras. The technology designed at The Factory building was the basis for all motion picture cameras until the introduction of digital in the 1990s.

Scott Forbes opened Studio One disco and the Backlot Theatre in 1974. Prior to Studio One, gay bars were small, windowless, anonymous buildings (in which one entered from the back of the building). The disco filled a vital community need: it celebrated sexual freedom for gay men. Studio One took the gay bar out of the closet, and helped bring gay men out too. Studio One's massive, mainstream influence and success helped bridge the cultural divide between the gay community and the dominant heterosexual society. And in the AIDS crisis, especially the harrowing early years, the disco helped raise desperately needed money and provided a place of community and hope and strength.

The Factory building is an important building and is central to the story/stories of America/Americans. The Factory building is a quintessential American building given its connection to the factory designing/building pioneers that helped create Ford's assembly line, and its pivotal role in movie-making history, and its crucial role in advancing LGBTQ civil rights. The Factory building must be listed on the National Register of Historic Places.

Sincerely,

Michael Q. Ceballos
cell:(310) 770-2073
email: michaelqceballos@mac.com
Portfolio:
http://mqcport.twiddleproductions.com

From:	Carron Leon
To:	Polanco, Julianne@Parks; Burg, William@Parks
Cc:	westhollywoodheritageproject@gmail.com
Subject:	The Factory nomination, West Hollywood, CA
Date:	Wednesday, July 13, 2016 8:28:11 PM

Dear Commissioners,

I support the nomination of The Factory building in West Hollywood, CA (Mitchell Camera Corp-Studio One/Backlot).
The building is an iconic structure in West Hollywood and the surrounding area. It is a classic Daylight Factory with a history related to the pioneering factory designer and builder Albert and Julius Kahn.

Mitchell Camera Corporation had the building built in 1929 to house their motion picture camera design and manufacture works. While in the building, Mitchell Camera Corp designed and manufactured motion picture cameras that revolutionized filmmaking; giving rise to, at the time, a new film artist called the cinematographer. By 1946, 85% of all movies worldwide were shot on Mitchell cameras. The technology designed at The Factory building was the basis for all motion picture cameras until the introduction of digital in the 1990s.

Scott Forbes opened Studio One disco and the Backlot Theatre in 1974. Prior to Studio One, gay bars were small, windowless, anonymous buildings (in which one entered from the back of the building). The disco filled a vital community need: it celebrated sexual freedom for gay men. Studio One took the gay bar out of the closet, and helped bring gay men out too. Studio One's massive, mainstream influence and success helped bridge the cultural divide between the gay community and the dominant heterosexual society. And in the AIDS crisis, especially the harrowing early years, the disco helped raise desperately needed money and provided a place of community and hope and strength.

The Factory building is an important building and is central to the story/stories of America/Americans. The Factory building is a quintessential American building given its connection to the factory designing/building pioneers that helped create Ford's assembly line, and its pivotal role in movie-making history, and its crucial role in advancing LGBTQ civil rights. The Factory building must be listed on the National Register of Historic Places.

Sincerely,

Carron V. Leon
West Hollywood, CA

From:	Hollywood Heritage
To:	Polanco, Julianne@Parks
Cc:	John Girodo; Burg, William@Parks; westhollywoodheritageproject@gmail.com; Richard Adkins
Subject:	Studio One (The Factory)/Mitchell Camera National Register Nomination Support
Date:	Sunday, July 10, 2016 6:55:56 PM
Attachments:	HH Comment Letter Studio One.pdf

Dear Ms. Polanco,

Thank you for the opportunity to comment on the proposed nomination of Studio One (The Factory)/Mitchell Camera Corporation at 665 North Robertson Boulevard for listing on the National Register of Historic Places. Hollywood Heritage very much supports this nomination. Please find our comments attached.

Thank you,
Catherine Rand

From: Tony Villanueva
To: Burg, William@Parks
Subject: Please Support the Factory Nomination
Date: Saturday, July 09, 2016 11:46:04 AM

Please Place This Letter into Public Record Regarding The Factory Nomination.

Dear Members of the California State Historical Resources Commission:

My name is Tony Villanueva I am a long time resident of Hollywood/West Hollywood and a member of the West Hollywood Preservation Alliance. I am writing in support of The Factory nomination. If ever there was a building that was worthy of nomination in West Hollywood it is this building and I will explain why.

The Factory has not one but two lives in the historical background of West Hollywood and contributed significantly in the support, development and foundation of the city that exist today.

First the Mitchell Camera Company (who constructed the building at 661 N. Robertson Blvd) played a very strong role in the early days supporting the film industry manufacturing state of the art movie cameras. That important contribution alone in an area world famous as the Motion Picture capital should qualify for nomination.

However The Factory building has an additional significant role in West Hollywood history as the very successful Studio One/The Backlot 70's and 80's Disco and live entertainment Cabaret. Nothing like it exist today and most likely never will again. As of this time the LGBT community has no designated landmarks in West Hollywood that pinpoint our history. Its time, this could be the very first and the most perfect candidate.

Studio One is part of our history. We danced there in the 70's with our friends on packed dance floors before the horror of AIDS came into our lives and took so many of them. By 1984 sadly, Studio One at The Factory hosted the first major fundraiser for AIDS Project Los Angeles when we realized the community needed help.

Studio One in The Factory was there long before anyone dreamed gay marriage could be a reality and even before we as a community recognized LG-B-T! If you liked men or women and you were the same sex you were labeled as Gay/Lesbian and that was it. Structures with Historical background teach, encourage dialogue/discussion, invite us to remember and honor the past. The Factory building has earned its place in history and could be an important marker of our past both in the Film industry and related to growth/change in the LGBT community. Is there any other structure that can make that claim anywhere even Los Angeles?

I have heard it said that some feel the building itself isn't esthetically pleasing, its ugly, its industrial. But that is exactly why we need to preserve it. People said the same thing about the Eiffel Tower after it was built. A building, like people should not be assessed by what you see on the exterior, but what creates them as a whole. Background, contribution, and character. The Factory building covers all of those in a positive way that is rich in history and The Factory is the last remaining structure of its type in that area that illustrates how the city evolved

The Factory building is Important. I urge the State Historical Resources Commission to approve The Factory nomination submitted by the West Hollywood Heritage Project. Please help us to save this structure and make The Factory the first west coast LGBT site listed on the National Register of Historic Places.

Thank You for you consideration.

Tony Villanueva

July 7, 2016

From: Polanco, Julianne@Parks
To: Burg, William@Parks; Crain, Amy@Parks; Correia, Jay@Parks
Cc: Saunders, Jenan@Parks
Subject: FW: WHPA Urges SHPC To Support The Factory Nomination
Date: Thursday, July 07, 2016 9:04:00 AM

Please put this in the record for the item at the July 29 meeting and provide to the commissioners. Thank you.

Julianne Polanco
State Historic Preservation Officer
California Office of Historic Preservation
1725 23rd St, Ste 100, Sacramento CA 95816-7100
916 445-7000 phone
916 445-7053 fax
julianne.polanco@parks.ca.gov
www.ohp.parks.ca.gov

From: voweho@gmail.com [mailto:voweho@gmail.com]
Sent: Tuesday, July 05, 2016 2:58 PM
To: Polanco, Julianne@Parks; Burg, William@Parks
Cc: Laura Boccaletti; Judson Feder; Roy Oldenkamp; Jon Ponder; westhollywoodheritageproject@gmail.com
Subject: WHPA Urges SHPC To Support The Factory Nomination

West Hollywood Preservation Alliance
P.O. Box 46073
West Hollywood, CA 90046-0073

July 5, 2016

Submitted Electronically; Please Place This Letter into the SHPC Packet and into the Public Record

Dear Members of the California State Historical Resources Commission:

The West Hollywood Preservation Alliance (WHPA) urges the State Historical Resources Commission to approve The Factory nomination submitted by the West Hollywood Heritage Project and to, thus, rightfully recognize The Factory's historic and iconic roles not only in the evolution of the motion picture industry but also in the nation's struggle for LGBT rights and acceptance.

The Factory was designed and built for Mitchell Camera Corporation in 1929 by the design-build firm Truscon Steel Company. The cameras built here revolutionized filmmaking, providing cinematographers with state of the art equipment. For example, Orson Wells' cinematographer Greg Toland consulted at The Factory on the camera that he would use to shoot the classic "Citizen Kane." By 1946, 85% of all motion pictures shown in theaters worldwide were filmed with Mitchell cameras that were made at the Mitchell Camera Corporation factory building.

In 1974, optometrist Scott Forbes opened Studio One at The Factory. This discotheque filled a vital need for the gay community by celebrating more openly and proudly the existence of gay men. Most gay bars at the time were in small, unremarkable buildings. At Studio One, over a thousand people

packed the dance floor every night and its Backlot Theatre hosted performers like Chita Rivera, Roslyn Kind, Joan Rivers, Phyllis Diller and Wayland Flowers.

In 1984, the first major AIDS fundraiser happened at Studio One for AIDS Project Los Angeles. Despite having been a celebrity hang-out for a decade, no celebrity would participate in the fundraiser except for Joan Rivers. Rivers said she received death threats.

With these considerations in mind, the WHPA strongly supports the nomination to have The Factory become the first West Coast LGBT site to be listed on the National Register of Historic Places. Thank you for your consideration.

--WHPA Board of Directors Laura Boccaletti, Judson Feder, Roy Rogers Oldenkamp, Victor Omelczenko, and Jon Ponder

**********The West Hollywood Preservation Alliance is a non-profit public benefit organization working to identify, protect and preserve the historic, architectural and cultural resources of West Hollywood and adjacent areas through education, advocacy, and assistance. Charitable contributions to the West Hollywood Preservation Alliance are tax deductible to the extent allowed by Federal and State tax laws – Federal Non-Profit 501(c)(3) Tax I.D. # 46-1587457

From: Polanco, Julianne@Parks
To: Burg, William@Parks; Crain, Amy@Parks; Correia, Jay@Parks
Cc: Saunders, Jenan@Parks
Subject: FW: Please Support The Factory Nomination
Date: Thursday, July 07, 2016 8:58:13 AM

Please put this in the record for the July29 meeting and provide to the commissioners. Thank you

Julianne Polanco
State Historic Preservation Officer
California Office of Historic Preservation
1725 23rd St, Ste 100, Sacramento CA 95816-7100
916 445-7000 phone
916 445-7053 fax
julianne.polanco@parks.ca.gov
www.ohp.parks.ca.gov

From: Michael Haddad [mailto:goldleafmusic@sbcglobal.net]
Sent: Tuesday, July 05, 2016 4:44 PM
To: Polanco, Julianne@Parks; Burg, William@Parks; westhollywoodheritageproject@gmail.com; info@westhollywoodpreservationalliance.org
Subject: Please Support The Factory Nomination

Dear Members of the California State Historical Resources Commission:

As a member of the West Hollywood Preservation Alliance (WHPA), I urge the State Historical Resources Commission to approve The Factory nomination submitted by the West Hollywood Heritage Project and to, thus, rightfully recognize The Factory's historic and iconic roles not only in the evolution of the motion picture industry but also in the nation's struggle for LGBT rights and acceptance.

The Factory was designed and built for Mitchell Camera Corporation in 1929 by the design-build firm Truscon Steel Company. The cameras built here revolutionized filmmaking, providing cinematographers with state of the art equipment. For example, Orson Wells' cinematographer Greg Toland consulted at The Factory on the camera that he would use to shoot the classic "Citizen Kane." By 1946, 85% of all motion pictures shown in theaters worldwide were filmed with Mitchell cameras that were made at the Mitchell Camera Corporation factory building.

In 1974, optometrist Scott Forbes opened Studio One at The Factory. This discotheque filled a vital need for the gay community by celebrating more openly and proudly the existence of gay men. Most gay bars at the time were in small, unremarkable buildings. At Studio One, over a thousand people packed the dance floor every night and its Backlot Theatre hosted performers like Chita Rivera, Roslyn Kind, Joan Rivers, Phyllis Diller and Wayland Flowers.

In 1984, the first major AIDS fundraiser happened at Studio One for AIDS Project Los Angeles. Despite having been a celebrity hang-out for a decade, no celebrity would participate in the

fundraiser except for Joan Rivers. Rivers said she received death threats.

With these considerations in mind, I strongly support the nomination to have The Factory become the first West Coast LGBT site to be listed on the National Register of Historic Places. Thank you for your consideration.

Michael Haddad
818.783.0084

From: Carlos Healy
To: Polanco, Julianne@Parks; Burg, William@Parks; westhollywoodheritageproject@gmail.com
Subject: The Factory nomination, West Hollywood, CA
Date: Wednesday, July 06, 2016 4:23:17 PM

Dear Commissioners,

I support the nomination of The Factory building in West Hollywood, CA (Mitchell Camera Corp-Studio One/Backlot).
The building is an iconic structure in West Hollywood and the surrounding area. It is a classic Daylight Factory with a history related to the pioneering factory designer and builder Albert and Julius Kahn.

Mitchell Camera Corporation had the building built in 1929 to house their motion picture camera design and manufacture works. While in the building, Mitchell Camera Corp designed and manufactured motion picture cameras that revolutionized filmmaking; giving rise to, at the time, a new film artist called the cinematographer. By 1946, 85% of all movies worldwide were shot on Mitchell cameras. The technology designed at The Factory building was the basis for all motion picture cameras until the introduction of digital in the 1990s.

Scott Forbes opened Studio One disco and the Backlot Theatre in 1974. Prior to Studio One, gay bars were small, windowless, anonymous buildings (in which one entered from the back of the building). The disco filled a vital community need: it celebrated sexual freedom for gay men. Studio One took the gay bar out of the closet, and helped bring gay men out too. Studio One's massive, mainstream influence and success helped bridge the cultural divide between the gay community and the dominant heterosexual society. And in the AIDS crisis, especially the harrowing early years, the disco helped raise desperately needed money and provided a place of community and hope and strength.

The Factory building is an important building and is central to the story/stories of America/Americans. The Factory building is a quintessential American building given its connection to the factory designing/building pioneers that helped create Ford's assembly line, and its pivotal role in movie-making history, and its crucial role in advancing LGBTQ civil rights. The Factory building must be listed on the National Register of Historic Places.

Sincerely,

Carlos Healy
West Hollywood, CA

From:	Dottie Wine
To:	Polanco, Julianne@Parks; Burg, William@Parks; westhollywoodheritageproject@gmail.com
Cc:	Dottie Wine
Subject:	The Factory nomination, West Hollywood, CA
Date:	Wednesday, July 06, 2016 12:52:38 PM
Attachments:	signature.asc

Dear Commissioners,

I support the nomination of The Factory building in West Hollywood, CA (Mitchell Camera Corp-Studio One/Backlot).
The building is an iconic structure in West Hollywood and the surrounding area. It is a classic Daylight Factory with a history related to the pioneering factory designer and builder Albert and Julius Kahn.

Mitchell Camera Corporation had the building built in 1929 to
house their motion picture camera design and manufacture works. While in the building, Mitchell Camera Corp designed and manufactured motion picture cameras that revolutionized filmmaking; giving rise to, at the time, a new film artist called the cinematographer. By 1946, 85% of all movies worldwide were shot on Mitchell cameras. The technology designed at The Factory building was the basis for all motion picture cameras until the introduction of digital in the 1990s.

Scott Forbes opened Studio One disco and the Backlot Theatre in 1974. Prior to Studio One, gay bars were small, windowless, anonymous buildings (in which one entered from the back of the building). The disco filled a vital community need: it celebrated sexual freedom for gay men. Studio One took the gay bar out of the closet, and helped bring gay men out too. Studio One's massive, mainstream influence and success helped bridge the cultural divide between the gay community and the dominant heterosexual society. And in the AIDS crisis, especially the harrowing early years, the disco helped raise desperately needed money and provided a place of community and hope and strength.

The Factory building is an important building and is central to the story/stories of America/Americans. The Factory building is a quintessential American building given its connection to the factory designing/building pioneers that helped create Ford's assembly line, and its pivotal role in movie-making history, and its crucial role in advancing LGBTQ civil rights. The Factory building must be listed on the National Register of Historic Places.

Sincerely,

Dottie Wine
Lomita, CA
Dottie Wine
310-213-1999

Sent from my Sprint Samsung Galaxy Note5.

From: Daniel Schuster
To: Burg, William@Parks
Subject: Please Place This Letter into Public Record Regarding The Factory Nomination
Date: Wednesday, July 06, 2016 12:28:34 PM

Dear William Burg.,

re: Please Place This Letter into Public Record Regarding The Factory Nomination

Dear Members of the California State Historical Resources Commission:

My name is Daniel Schuster and I am a member of the West Hollywood Preservation Alliance (WHPA), I would be grateful if the State Historical Resources Commission were to approve The Factory nomination submitted by the West Hollywood Heritage Project and to, thus, rightfully recognize The Factory's historic and iconic roles not only in the evolution of the motion picture industry but also in the nation's struggle for LGBT rights and acceptance.

The Factory was designed and built for Mitchell Camera Corporation in 1929 by the design-build firm Truscon Steel Company. The cameras built here revolutionized filmmaking, providing cinematographers with state of the art equipment. For example, Orson Wells' cinematographer Greg Toland consulted at The Factory on the camera that he would use to shoot the classic "Citizen Kane." By 1946, 85% of all motion pictures shown in theaters worldwide were filmed with Mitchell cameras that were made at the Mitchell Camera Corporation factory building.

In 1974, optometrist Scott Forbes opened Studio One at The Factory. This discotheque filled a vital need for the gay community by celebrating more openly and proudly the existence of gay men. Most gay bars at the time were in small, unremarkable buildings. At Studio One, over a thousand people packed the dance floor every night and its Backlot Theatre hosted performers like Chita Rivera, Roslyn Kind, Joan Rivers, Phyllis Diller and Wayland Flowers.

In 1984, the first major AIDS fundraiser happened at Studio One for AIDS Project Los Angeles. Despite having been a celebrity hang-out for a decade, no celebrity would participate in the fundraiser except for Joan Rivers. Rivers said she received death threats.

Your help is very much appreciate. I strongly support the nomination to have The Factory become the first West Coast LGBT site to be listed on the National Register of Historic Places. Thank you for your consideration.

Daniel Schuster (818) 261-3981

23674 Sandalwood Street

West Hills, CA 91307

From:	BRIAN GLEASON
To:	Polanco, Julianne@Parks; Burg, William@Parks
Cc:	westhollywoodheritageproject@gmail.com; info@westhollywoodpreservationalliance.org
Subject:	Nomination of Factory for lgbt historical site
Date:	Wednesday, July 06, 2016 11:44:53 AM

Greetings gentlepersons: I am writing as a member of the West Hollywood Preservation Alliance in support of a nomination (and ratification) of the Factory Site on Robertson in West Hollywood as an LGBT Historical site.

President Obama's courageous proclamation of Stonewall as an LGBT monument/historical site braves territory of vital recognition of decades (really, centuries) long difficult struggles by the LGBT community for equal rights, recognition and dignity.

The Factory has also played a vital role in LGBT history. In 1974, optometrist Scott Forbes opened Studio One at The Factory. This discotheque filled a vital need for the gay community by celebrating more openly and proudly the existence of gay men. Most gay bars at the time were in small, unremarkable buildings. At Studio One, over a thousand people packed the dance floor every night and its Backlot Theatre hosted performers like Chita Rivera, Roslyn Kind, Joan Rivers, Phyllis Diller and Wayland Flowers.
In 1984, the first major AIDS fundraiser happened at Studio One for AIDS Project Los Angeles.

I urge you to support us in this effort. West Hollywood continues to be a vital, thriving community for LGBT people. As as result of our history of tolerance and openness, it has also become a thriving community for all. Please let us not forget the importance of sites like the Factory in this history.

We must remember.

Thank you for your consideration.

Brian Gleason

From:	meister@roadrunner.com
To:	Polanco, Julianne@Parks; Burg, William@Parks; westhollywoodheritageproject@gmail.com; info@westhollywoodpreservationalliance.org
Subject:	The Factory
Date:	Wednesday, July 06, 2016 7:43:42 AM

Dear Members of the California State Historical Resources Commission:
As a member of the West Hollywood Preservation Alliance (WHPA), I urge the State Historical Resources Commission to approve The Factory nomination submitted by the West Hollywood Heritage Project and to, thus, rightfully recognize The Factory's historic and iconic roles not only in the evolution of the motion picture industry but also in the nation's struggle for LGBT rights and acceptance.
The Factory was designed and built for Mitchell Camera Corporation in 1929 by the design-build firm Truscon Steel Company. The cameras built here revolutionized filmmaking, providing cinematographers with state of the art equipment. For example, Orson Wells' cinematographer Greg Toland consulted at The Factory on the camera that he would use to shoot the classic "Citizen Kane." By 1946, 85% of all motion pictures shown in theaters worldwide were filmed with Mitchell cameras that were made at the Mitchell Camera Corporation factory building.
In 1974, optometrist Scott Forbes opened Studio One at The Factory. This discotheque filled a vital need for the gay community by celebrating more openly and proudly the existence of gay men. Most gay bars at the time were in small, unremarkable buildings. At Studio One, over a thousand people packed the dance floor every night and its Backlot Theatre hosted performers like Chita Rivera, Roslyn Kind, Joan Rivers, Phyllis Diller and Wayland Flowers.
In 1984, the first major AIDS fundraiser happened at Studio One for AIDS Project Los Angeles. Despite having been a celebrity hang-out for a decade, no celebrity would participate in the fundraiser except for Joan Rivers. Rivers said she received death threats.
With these considerations in mind, I strongly support the nomination to have The Factory become the first West Coast LGBT site to be listed on the National Register of Historic Places. Thank you for your consideration.
Sincerely,
Debbie Meister

From: Kevin Burton
To: Burg, William@Parks; Polanco, Julianne@Parks
Subject: Support for "The Factory" nomination in West Hollywood
Date: Wednesday, July 06, 2016 7:37:42 AM

California State Historical Resources Commission

Dear Members,

As a member of the West Hollywood Preservation Alliance (WHPA), I urge the State Historical Resources Commission to approve the nomination of "The Factory" in West Hollywood to the National Register of Historic Places. This nomination has been submitted by the West Hollywood Heritage Project to recognize The Factory's historic and iconic roles in both the evolution of the motion picture industry and in the nation's struggle for LGBT rights and acceptance.

The Factory was designed and built for Mitchell Camera Corporation in 1929 by the design-build firm Truscon Steel Company. The cameras built here revolutionized filmmaking, providing state of the art equipment for cinematographers, including for example, those who filmed the classic movie "Citizen Kane." By 1946, 85% of all motion pictures shown in theaters worldwide were filmed with Mitchell cameras that were made at the Mitchell Camera Corporation Factory building. The Factory thus represents a rapidly fading signature of the industrial heritage of West Hollywood.

A second phase of its history that is central to our city began in 1974, when optometrist Scott Forbes opened "Studio One" at The Factory. This discotheque filled a vital need for the gay community by celebrating more openly and proudly the existence of gay men. Most gay bars at the time were in small, unremarkable buildings. At Studio One, over a thousand people packed the dance floor every night and its Backlot Theatre hosted performers like Chita Rivera, Roslyn Kind, Joan Rivers, Phyllis Diller and Wayland Flowers. In 1984, the first major AIDS fundraiser happened at Studio One for AIDS Project Los Angeles.

Based on this multifaceted historic context, I strongly support the nomination and request your endorsement for listing The Factory on the National Register of Historic Places. Thank you for your consideration.

Kevin Burton
West Hollywood

From:	Kate Wolf
To:	Polanco, Julianne@Parks; Burg, William@Parks; westhollywoodheritageproject@gmail.com
Subject:	The Factory nomination, West Hollywood, CA
Date:	Tuesday, July 05, 2016 8:32:33 PM

Dear Commissioners,

I support the nomination of The Factory building in West Hollywood, CA (Mitchell Camera Corp-Studio One/Backlot).
The building is an iconic structure in West Hollywood and the surrounding area. It is a classic Daylight Factory with a history related to the pioneering factory designer and builder Albert and Julius Kahn.

Mitchell Camera Corporation had the building built in 1929 to house their motion picture camera design and manufacture works. While in the building, Mitchell Camera Corp designed and manufactured motion picture cameras that revolutionized filmmaking; giving rise to, at the time, a new film artist called the cinematographer. By 1946, 85% of all movies worldwide were shot on Mitchell cameras. The technology designed at The Factory building was the basis for all motion picture cameras until the introduction of digital in the 1990s.

Scott Forbes opened Studio One disco and the Backlot Theatre in 1974. Prior to Studio One, gay bars were small, windowless, anonymous buildings (in which one entered from the back of the building). The disco filled a vital community need: it celebrated sexual freedom for gay men. Studio One took the gay bar out of the closet, and helped bring gay men out too. Studio One's massive, mainstream influence and success helped bridge the cultural divide between the gay community and the dominant heterosexual society. And in the AIDS crisis, especially the harrowing early years, the disco helped raise desperately needed money and provided a place of community and hope and strength.

The Factory building is an important building and is central to the story/stories of America/Americans. The Factory building is a quintessential American building given its connection to the factory designing/building pioneers that helped create Ford's assembly line, and its pivotal role in movie-making history, and its crucial role in advancing LGBTQ civil rights. The Factory building must be listed on the National Register of Historic Places.

Kate Wolf
Los Angeles

From: David McDermott
To: Polanco, Julianne@Parks; Burg, William@Parks; westhollywoodheritageproject@gmail.com
Subject: RE: The Factory nomination, West Hollywood, CA
Date: Tuesday, July 05, 2016 6:41:03 PM

Dear Commissioners,

I support the nomination of The Factory building in West Hollywood, CA (Mitchell Camera Corp-Studio One/Backlot).
The building is an iconic structure in West Hollywood and the surrounding area. It is a classic Daylight Factory with a history related to the pioneering factory designer and builder Albert and Julius Kahn.

Mitchell Camera Corporation had the building built in 1929 to house their motion picture camera design and manufacture works. While in the building, Mitchell Camera Corp designed and manufactured motion picture cameras that revolutionized filmmaking; giving rise to, at the time, a new film artist called the cinematographer. By 1946, 85% of all movies worldwide were shot on Mitchell cameras. The technology designed at The Factory building was the basis for all motion picture cameras until the introduction of digital in the 1990s.

Scott Forbes opened Studio One disco and the Backlot Theatre in 1974. Prior to Studio One, gay bars were small, windowless, anonymous buildings (in which one entered from the back of the building). The disco filled a vital community need: it celebrated sexual freedom for gay men. Studio One took the gay bar out of the closet, and helped bring gay men out too. Studio One's massive, mainstream influence and success helped bridge the cultural divide between the gay community and the dominant heterosexual society. And in the AIDS crisis, especially the harrowing early years, the disco helped raise desperately needed money and provided a place of community and hope and strength.

The Factory building is an important building, central to the story of America. The Factory building is a quintessential American building given its connection to the factory designing/building pioneers that helped create Ford's assembly line, and its pivotal role in movie-making history, and its crucial role in advancing LGBTQ civil rights. The Factory building must be listed on the National Register of Historic Places.

Sincerely,

David McDermott
Reseda, California

From:	TimNP@aol.com
To:	Polanco, Julianne@Parks; Burg, William@Parks; westhollywoodheritageproject@gmail.com
Subject:	The Factory nomination, West Hollywood, CA
Date:	Tuesday, July 05, 2016 6:08:51 PM

Dear Commissioners,

I support the nomination of The Factory building in West Hollywood, CA (Mitchell Camera Corp-Studio One/Backlot).
The building is an iconic structure in West Hollywood and the surrounding area. It is a classic Daylight Factory with a history related to the pioneering factory designer and builder Albert and Julius Kahn.

Mitchell Camera Corporation had the building built in 1929 to house their motion picture camera design and manufacture works. While in the building, Mitchell Camera Corp designed and manufactured motion picture cameras that revolutionized filmmaking; giving rise to, at the time, a new film artist called the cinematographer. By 1946, 85% of all movies worldwide were shot on Mitchell cameras. The technology designed at The Factory building was the basis for all motion picture cameras until the introduction of digital in the 1990s.

Scott Forbes opened Studio One disco and the Backlot Theatre in 1974. Prior to Studio One, gay bars were small, windowless, anonymous buildings (in which one entered from the back of the building). The disco filled a vital community need: it celebrated sexual freedom for gay men. Studio One took the gay bar out of the closet, and helped bring gay men out too. Studio One's massive, mainstream influence and success helped bridge the cultural divide between the gay community and the dominant heterosexual society. And in the AIDS crisis, especially the harrowing early years, the disco helped raise desperately needed money and provided a place of community and hope and strength.

The Factory building is an important building and is central to the story/stories of America/Americans. The Factory building is a quintessential American building given its connection to the factory designing/building pioneers that helped create Ford's assembly line, and its pivotal role in movie-making history, and its crucial role in advancing LGBTQ civil rights. The Factory building must be listed on the National Register of Historic Places.

Sincerely,

Tim Perry
West Hollywood California

Tim Perry

Estate Agent

timperry@bhhscal.com

323-397-6948 Cell

9696 Wilshire Blvd., Beverly Hills CA 90212

BERKSHIRE HATHAWAY HomeServices California Properties

From:	virginia gillick
To:	Polanco, Julianne@Parks; Burg, William@Parks; westhollywoodheritageproject@gmail.com; info@westhollywoodpreservationalliance.org
Subject:	The Factory, West Hollywood, California
Date:	Tuesday, July 05, 2016 5:11:50 PM

Please place this letter into public record regarding The Factory as a California Historical Resource.

Dear Members of the California State Historical Resources Commission:
As a member of the West Hollywood Preservation Alliance (WHPA), I urge the State Historical Resources Commission to approve The Factory nomination submitted by the West Hollywood Heritage Project and to, thus, rightfully recognize The Factory's historic and iconic roles not only in the evolution of the motion picture industry but also in the nation's struggle for LGBT rights and acceptance.

The Factory was designed and built for Mitchell Camera Corporation in 1929 by the design-build firm Truscon Steel Company. The cameras built here revolutionized filmmaking, providing cinematographers with state of the art equipment. For example, Orson Wells' cinematographer Greg Toland consulted at The Factory on the camera that he would use to shoot the classic "Citizen Kane." By 1946, 85% of all motion pictures shown in theaters worldwide were filmed with Mitchell cameras that were made at the Mitchell Camera Corporation factory building.

In 1974, optometrist Scott Forbes opened Studio One at The Factory. This discotheque filled a vital need for the gay community by celebrating more openly and proudly the existence of gay men. Most gay bars at the time were in small, unremarkable buildings. At Studio One, over a thousand people packed the dance floor every night and its Backlot Theatre hosted performers like Chita Rivera, Roslyn Kind, Joan Rivers, Phyllis Diller and Wayland Flowers.

In 1984, the first major AIDS fundraiser happened at Studio One for AIDS Project Los Angeles. Despite having been a celebrity hang-out for a decade, no celebrity would participate in the fundraiser except for Joan Rivers. Rivers said she received death threats.

With these considerations in mind, I strongly support the nomination to have The Factory become the first West Coast LGBT site to be listed on the National Register of Historic Places. Thank you for your consideration.

Sincerely,

Virginia Gillick

1400 North Hayworth Avenue, West Hollywood, CA 90046

virginia.gillick@gmail.com

From: Stephen Lewis
To: Burg, William@Parks
Subject: Please support The Factory nomination
Date: Tuesday, July 05, 2016 5:07:20 PM

As a member of the West Hollywood Preservation Alliance (WHPA), I urge the State Historical Resources Commission to approve The Factory nomination submitted by the West Hollywood Heritage Project and to, thus, rightfully recognize The Factory's historic and iconic roles not only in the evolution of the motion picture industry but also in the nation's struggle for LGBT rights and acceptance.

The Factory was designed and built for Mitchell Camera Corporation in 1929 by the design-build firm Truscon Steel Company. The cameras built here revolutionized filmmaking, providing cinematographers with state of the art equipment. For example, Orson Wells' cinematographer Greg Toland consulted at The Factory on the camera that he would use to shoot the classic "Citizen Kane." By 1946, 85% of all motion pictures shown in theaters worldwide were filmed with Mitchell cameras that were made at the Mitchell Camera Corporation factory building.

In 1974, optometrist Scott Forbes opened Studio One at The Factory. This discotheque filled a vital need for the gay community by celebrating more openly and proudly the existence of gay men. Most gay bars at the time were in small, unremarkable buildings. At Studio One, over a thousand people packed the dance floor every night and its Backlot Theatre hosted performers like Chita Rivera, Roslyn Kind, Joan Rivers, Phyllis Diller and Wayland Flowers.

In 1984, the first major AIDS fundraiser happened at Studio One for AIDS Project Los Angeles. Despite having been a celebrity hang-out for a decade, no celebrity would participate in the fundraiser except for Joan Rivers. Rivers said she received death threats.

With these considerations in mind, I strongly support the nomination to have The Factory become the first West Coast LGBT site to be listed on the National Register of Historic Places. Thank you for your consideration.

Stephen Lewis
(310) 468-1833

From:	phillip zonkel
To:	Polanco, Julianne@Parks; Burg, William@Parks
Cc:	westhollywoodheritageproject@gmail.com
Subject:	The Factory nomination, West Hollywood, California
Date:	Tuesday, July 05, 2016 3:06:45 PM

Dear Commissioners,

I support the nomination of The Factory building in West Hollywood, CA (Mitchell Camera Corp-Studio One/Backlot).

The building is an iconic structure in West Hollywood and the surrounding area. It is a classic Daylight Factory with a history related to the pioneering factory designer and builder Albert and Julius Kahn.

Mitchell Camera Corporation had the building built in 1929 to house their motion picture camera design and manufacture works. While in the building, Mitchell Camera Corp designed and manufactured motion picture cameras that revolutionized filmmaking; giving rise to, at the time, a new film artist called the cinematographer. By 1946, 85% of all movies worldwide were shot on Mitchell cameras. The technology designed at The Factory building was the basis for all motion picture cameras until the introduction of digital in the 1990s.

Scott Forbes opened Studio One disco and the Backlot Theatre in 1974. Prior to Studio One, gay bars were small, windowless, anonymous buildings (in which one entered from the back of the building). Studio One filled a vital community need: it celebrated sexual freedom for gay men. Studio One took the gay bar out of the closet, and helped bring gay men out too. Studio One's massive, mainstream influence and success helped bridge the cultural divide between the gay community and the dominant heterosexual society. And in the AIDS crisis, especially the harrowing early years, Studio One helped raise desperately needed money and provided a place of community and hope and strength.

The Factory building is an important building and is central to the story/stories of America/Americans. The Factory building is a quintessential American building given its connection to the factory designing/building pioneers that helped create Ford's assembly line, and its pivotal role in movie-making history, and its crucial role in advancing LGBTQ civil rights. The Factory building must be listed on the National Register of Historic Places.

Sincerely,

Phillip Zonkel
Long Beach, California

From: Sharon Sekhon
To: westhollywoodheritageproject@gmail.com; Burg, William@Parks; Polanco, Julianne@Parks
Subject: The Factory Nomination - West Hollywood, California
Date: Tuesday, July 05, 2016 2:13:14 PM

RE: The Factory nomination, West Hollywood, CA

Dear Commissioners,

I support the nomination of The Factory building in West Hollywood, CA (Mitchell Camera Corp-Studio One/Backlot).
The building is an iconic structure in West Hollywood and the surrounding area. It is a classic Daylight Factory with a history related to the pioneering factory designer and builder Albert and Julius Kahn.

Mitchell Camera Corporation had the building built in 1929 to house their motion picture camera design and manufacture works. While in the building, Mitchell Camera Corp designed and manufactured motion picture cameras that revolutionized filmmaking; giving rise to, at the time, a new film artist called the cinematographer. By 1946, 85% of all movies worldwide were shot on Mitchell cameras. The technology designed at The Factory building was the basis for all motion picture cameras until the introduction of digital in the 1990s.

Scott Forbes opened Studio One disco and the Backlot Theatre in 1974. Prior to Studio One, gay bars were small, windowless, anonymous buildings (in which one entered from the back of the building). The disco filled a vital community need: it celebrated sexual freedom for gay men. Studio One took the gay bar out of the closet, and helped bring gay men out too. Studio One's massive, mainstream influence and success helped bridge the cultural divide between the gay community and the dominant heterosexual society. And in the AIDS crisis, especially the harrowing early years, the disco helped raise desperately needed money and provided a place of community and hope and strength.

The Factory building is an important building and is central to the story/stories of America/Americans. The Factory building is a quintessential American building given its connection to the factory designing/building pioneers that helped create Ford's assembly line, and its pivotal role in movie-making history, and its crucial role in advancing LGBTQ civil rights. The Factory building must be listed on the National Register of Historic

Places.

Sincerely,

Sharon Sekhon

South Pasadena, CA

From:	David Raiklen
To:	Polanco, Julianne@Parks; Burg, William@Parks; westhollywoodheritageproject@gmail.com
Subject:	The Factory nomination, West Hollywood, CA
Date:	Tuesday, July 05, 2016 12:46:11 PM

Dear Commissioners,

I support the nomination of The Factory building in West Hollywood, CA (Mitchell Camera Corp-Studio One/Backlot).
The building is an iconic structure in West Hollywood and the surrounding area. It is a classic Daylight Factory with a history related to the pioneering factory designer and builder Albert and Julius Kahn.

Mitchell Camera Corporation had the building built in 1929 to house their motion picture camera design and manufacture works. While in the building, Mitchell Camera Corp designed and manufactured motion picture cameras that revolutionized filmmaking; giving rise to, at the time, a new film artist called the cinematographer. By 1946, 85% of all movies worldwide were shot on Mitchell cameras. The technology designed at The Factory building was the basis for all motion picture cameras until the introduction of digital in the 1990s.

Scott Forbes opened Studio One disco and the Backlot Theatre in 1974. Prior to Studio One, gay bars were small, windowless, anonymous buildings (in which one entered from the back of the building). The disco filled a vital community need: it celebrated sexual freedom for gay men. Studio One took the gay bar out of the closet, and helped bring gay men out too. Studio One's massive, mainstream influence and success helped bridge the cultural divide between the gay community and the dominant heterosexual society. And in the AIDS crisis, especially the harrowing early years, the disco helped raise desperately needed money and provided a place of community and hope and strength.

The Factory building is an important building and is central to the story/stories of America/Americans. The Factory building is a quintessential American building given its connection to the factory designing/building pioneers that helped create Ford's assembly line, and its pivotal role in movie-making history, and its crucial role in advancing LGBTQ civil rights. The Factory building must be listed on the National Register of Historic Places.

Sincerely,
David Raiklen
Los Angeles, California

From:	Richard Schave
To:	Polanco, Julianne@Parks; Burg, William@Parks
Cc:	westhollywoodheritageproject@gmail.com
Subject:	The Factory nomination, West Hollywood, CA
Date:	Tuesday, July 05, 2016 12:23:18 PM

Dear Commissioners,

I support the nomination of The Factory building in West Hollywood, CA (Mitchell Camera Corp-Studio One/Backlot).

The building is an iconic structure in West Hollywood and the surrounding area. It is a classic Daylight Factory with a history related to the pioneering factory designer and builder Albert and Julius Kahn.

Mitchell Camera Corporation had the building built in 1929 to house their motion picture camera design and manufacture works. While in the building, Mitchell Camera Corp designed and manufactured motion picture cameras that revolutionized filmmaking; giving rise to, at the time, a new film artist called the cinematographer. By 1946, 85% of all movies worldwide were shot on Mitchell cameras. The technology designed at The Factory building was the basis for all motion picture cameras until the introduction of digital in the 1990s.

Scott Forbes opened Studio One disco and the Backlot Theatre in 1974. Prior to Studio One, gay bars were small, windowless, anonymous buildings (in which one entered from the back of the building). Studio One filled a vital community need: it celebrated sexual freedom for gay men. Studio One took the gay bar out of the closet, and helped bring gay men out too. Studio One's massive, mainstream influence and success helped bridge the cultural divide between the gay community and the dominant heterosexual society. And in the AIDS crisis, especially the harrowing early years, Studio One helped raise desperately needed money and provided a place of community and hope and strength.

The Factory building is an important building and is central to the story/stories of America/Americans. The Factory building is a quintessential American building given its connection to the factory designing/building pioneers that helped create Ford's assembly line, and its pivotal role in movie-making history, and its crucial role in advancing LGBTQ civil rights. The Factory building must be listed on the National Register of Historic Places.

I remain,

Richard Schave
Esotouric Bus Adventures
Los Angeles, Caifornia

From:	West Hollywood Heritage Project
To:	Polanco, Julianne@Parks; Burg, William@Parks
Cc:	desertwheels@yahoo.com
Subject:	Fwd: The Factory Nomination, West Hollywood, CA
Date:	Tuesday, July 05, 2016 12:20:20 PM

---------- Forwarded message ----------
From: **Jack Wheeler** <desertwheels@yahoo.com>
Date: Sun, Jul 3, 2016 at 6:32 PM
Subject: Re: The Factory Nomination, West Hollywood, CA
To: "westhollywoodheritageproject@gmail.com"
<westhollywoodheritageproject@gmail.com>

Dear National Register Commissioners,

I support the nomination of The Factory building in West Hollywood, CA (Mitchell Camera Corp-Studio One/Backlot).

The building is an iconic structure in West Hollywood and the surrounding area. It is a classic Daylight Factory with a history related to the pioneering factory designer and builder Albert and Julius Kahn.

Mitchell Camera Corporation had the building built in 1929 to house their motion picture camera design and manufacture works. While in the building, Mitchell Camera Corp designed and manufactured motion picture cameras that revolutionized filmmaking; giving rise to, at the time, a new film artist called the cinematographer. By 1946, 85% of all movies worldwide were shot on Mitchell cameras. The technology designed at The Factory building was the basis for all motion picture cameras until the introduction of digital in the 1990s.

Scott Forbes opened Studio One disco and the Backlot Theatre in 1974. Prior to Studio One, gay bars were small, windowless, anonymous buildings (in which one entered from the back of the building). The disco filled a vital community need: it celebrated sexual freedom for gay men. Studio One took the gay bar out of the closet, and helped bring gay men out too. Studio One's massive, mainstream influence and success helped bridge the cultural divide between the gay community and the dominant heterosexual society. And in the AIDS crisis, especially the harrowing early years, the disco helped raise desperately needed money and provided a place of community and hope and strength.

The Factory building is an important building and is central to the story/stories of America/Americans. The Factory building is a quintessential American building given its connection to the factory designing/building pioneers that helped create Ford's assembly line, and its pivotal role in movie-making history, and its crucial role in advancing LGBTQ civil rights. The Factory building must be listed on the National Register of Historic Places.

Sincerely,
Jack Wheeler
Palm Springs, CA

From:	West Hollywood Heritage Project
To:	Polanco, Julianne@Parks; Burg, William@Parks
Cc:	randallt001@hawaii.rr.com
Subject:	Fwd: Factory Nomination
Date:	Tuesday, July 05, 2016 12:19:25 PM

---------- Forwarded message ----------
From: **Tony Randall** <randallt001@hawaii.rr.com>
Date: Sun, Jul 3, 2016 at 11:29 PM
Subject: Factory Nomination
To: westhollywoodheritageproject@gmail.com

RE: The Factory nomination,West Hollywood, CA
Dear National Register Commissioners,
I support the nomination of The Factory building in West Hollywood, CA (Mitchell Camera Corp-Studio One/Backlot).
The building is an iconic structure in West Hollywood and the surrounding area. It is a classic Daylight Factory with a history related to the pioneering factory designer and builder Albert and Julius Kahn.
Mitchell Camera Corporation had the building built in 1929 to house their motion picture camera design and manufacture works. While in the building, Mitchell Camera Corp designed and manufactured motion picture cameras that revolutionized filmmaking; giving rise to, at the time, a new film artist called the cinematographer. By 1946, 85% of all movies worldwide were shot on Mitchell cameras. The technology designed at The Factory building was the basis for all motion picture cameras until the introduction of digital in the 1990s.
Scott Forbes opened Studio One disco and the Backlot Theatre in 1974. Prior to Studio One, gay bars were small, windowless, anonymous buildings (in which one entered from the back of the building). The disco filled a vital community need: it celebrated sexual freedom for gay men. Studio One took the gay bar out of the closet, and helped bring gay men out too. Studio One's massive, mainstream influence and success helped bridge the cultural divide between the gay community and the dominant heterosexual society. And in the AIDS crisis, especially the harrowing early years, the disco helped raise desperately needed money and provided a place of community and hope and strength.
The Factory building is an important building and is central to the story/stories of America/Americans. The Factory building is a quintessential American building given its connection to the factory designing/building pioneers that helped create Ford's assembly line, and its pivotal role in movie-making history, and its crucial role in advancing LGBTQ civil rights. The Factory building must be listed on the National Register of Historic Places.
Sincerely, Anthony Randall Honolulu, Hi.

From:	West Hollywood Heritage Project
To:	Polanco, Julianne@Parks; Burg, William@Parks
Cc:	rdoney@dc.rr.com
Subject:	Fwd: Backlot
Date:	Tuesday, July 05, 2016 12:17:56 PM

---------- Forwarded message ----------
From: **Randy Doney** <rdoney@dc.rr.com>
Date: Mon, Jul 4, 2016 at 10:27 AM
Subject: Backlot
To: westhollywoodheritageproject@gmail.com

Yes. Save.

R. Doney
Palm Springs , ca

Sent from my iPad

From:	West Hollywood Heritage Project
To:	Polanco, Julianne@Parks; Burg, William@Parks
Cc:	Timothy Doherty
Subject:	Fwd: The Factory building NR nomination
Date:	Tuesday, July 05, 2016 12:17:12 PM

---------- Forwarded message ----------
From: **Timothy Doherty** <l-c-d-l-m@sbcglobal.net>
Date: Mon, Jul 4, 2016 at 10:37 AM
Subject: The Factory building NR nomination
To: "westhollywoodheritageproject@gmail.com"
<westhollywoodheritageproject@gmail.com>

Dear Commissioners,
I support the nomination of the Factory building in West Hollywood, CA [Mitchell Camera Corp-Studio One/Backlot.]
You know all about Mitchell Camera Corporation and the contribution it made to the design and manufacture there of cameras that revolutionized filmmaking. It was the birthplace of what we now know as "The Cinematographer." That alone might earn designation as an historical site.
Perhaps more important is the building's place in LGBT history. Before Scott Forbes opened Studio One and the Backlot Theater there more than fifty years ago, gay bars were routinely faceless little places where gay men could meet in hoped-for peace and anonymity. Studio One changed all that. It was a place that celebrated sexual freedom for gay men. With its visibility, massive success and mainstream influence, it helped bridge the gap between the gay community and the dominant heterosexual society and played a vital part in raising money and offering support during the early days of the AIDS crisis.
In light of the recent tragedy at Pulse in Orlando, the importance of gay bars and clubs has been highlighted once again. They are places where LGBT people can meet and fully be themselves.We need to preserve and honor such places, as we have recently seen with The Stonewall Inn in New York, so that future generations of gay men and women will learn their history and know what went before.
I believe that The Factory Building is an important building and is central to the story/storylines of America/Americans. It has earned a place on the National Register of Historic Places.

Sincerely,
Tim Doherty
Los Angeles, CA

From: Polanco, Julianne@Parks
To: WHY06@aol.com
Cc: Burg, William@Parks; Crain, Amy@Parks; Correia, Jay@Parks; Saunders, Jenan@Parks
Subject: RE: The Factory nomination, West Hollywood, CA
Date: Tuesday, July 05, 2016 11:17:23 AM

Thank you,

A copy of your email will be placed in the record of the July 29 commission meeting.

Julianne Polanco
State Historic Preservation Officer
California Office of Historic Preservation
1725 23rd St, Ste 100, Sacramento CA 95816-7100
916 445-7000 phone
916 445-7053 fax
julianne.polanco@parks.ca.gov
www.ohp.parks.ca.gov

From: WHY06@aol.com [mailto:WHY06@aol.com]
Sent: Tuesday, July 05, 2016 11:09 AM
To: Polanco, Julianne@Parks; Burg, William@Parks
Subject: RE: The Factory nomination, West Hollywood, CA

Dear Commissioners,

I support the nomination of The Factory building in West Hollywood, CA (Mitchell Camera Corp-Studio One/Backlot).

The building is an iconic structure in West Hollywood and the surrounding area. It is a classic Daylight Factory with a history related to the pioneering factory designer and builder Albert and Julius Kahn.

Mitchell Camera Corporation had the building built in 1929 to house their motion picture camera design and manufacture works. While in the building, Mitchell Camera Corp designed and manufactured motion picture cameras that revolutionized filmmaking; giving rise to, at the time, a new film artist called the cinematographer. By 1946, 85% of all movies worldwide were shot on Mitchell cameras. The technology designed at The Factory building was the basis for all motion picture cameras until the introduction of digital in the 1990s.

Scott Forbes opened Studio One disco and the Backlot Theatre in 1974. Prior to Studio One, gay bars were small, windowless, anonymous buildings (in which one entered from the back of the building). The disco filled a vital community need: it celebrated sexual freedom for gay men. Studio One took the gay bar out of the closet, and helped bring gay men out too. Studio One's massive, mainstream influence and success helped bridge the cultural divide between the gay community and the dominant heterosexual society. And in the AIDS crisis, especially the harrowing early years, the disco helped raise desperately needed money and provided a place of community and hope and strength.

The Factory building is an important building and is central to the story/stories of America/Americans. The Factory building is a quintessential American building given its connection to the factory designing/building pioneers that helped create Ford's assembly line, and its pivotal role in movie-making history, and its crucial role in advancing LGBTQ civil rights. The Factory building must be listed on the National Register of Historic Places.

Sincerely,

Brooks Wachtel
West Hollywood, Ca

From:	Polanco, Julianne@Parks
To:	Deb; Burg, William@Parks; westhollywoodheritageproject@gmail.com
Subject:	RE: The Factory nomination, West Hollywood, CA
Date:	Tuesday, July 05, 2016 10:56:00 AM

Thank you.

A copy of your email will be placed in the record of the July 29 commission meeting.

Julianne Polanco
State Historic Preservation Officer
California Office of Historic Preservation
1725 23rd St, Ste 100, Sacramento CA 95816-7100
916 445-7000 phone
916 445-7053 fax
julianne.polanco@parks.ca.gov
www.ohp.parks.ca.gov

From: Deb [mailto:debnov1950@aol.com]
Sent: Sunday, July 03, 2016 11:37 AM
To: Polanco, Julianne@Parks; Burg, William@Parks; westhollywoodheritageproject@gmail.com
Subject: The Factory nomination, West Hollywood, CA

Dear Commissioners,

I support the nomination of The Factory building in West Hollywood, CA (Mitchell Camera Corp-Studio One/Backlot).
The building is an iconic structure in West Hollywood and the surrounding area. It is a classic Daylight Factory with a history related to the pioneering factory designer and builder Albert and Julius Kahn.

Mitchell Camera Corporation had the building built in 1929 to house their motion picture camera design and manufacture works. While in the building, Mitchell Camera Corp designed and manufactured motion picture cameras that revolutionized filmmaking; giving rise to, at the time, a new film artist called the cinematographer. By 1946, 85% of all movies worldwide were shot on Mitchell cameras. The technology designed at The Factory building was the basis for all motion picture cameras until the introduction of digital in the 1990s.

Scott Forbes opened Studio One disco and the Backlot Theatre in 1974. Prior to Studio One, gay bars were small, windowless, anonymous buildings (in which one entered from the back of the building). The disco filled a vital community need: it celebrated sexual freedom for gay men. Studio One took the gay bar out of the closet, and helped bring gay men out too. Studio One's massive, mainstream influence and success helped bridge the cultural divide between the gay community and the dominant heterosexual society. And in the AIDS crisis, especially the harrowing early years, the disco helped raise desperately needed money and provided a place of community and hope and strength.

The Factory building is an important building and is central to the story/stories of America/Americans. The Factory building is a quintessential American building given its connection to the factory designing/building pioneers that helped create Ford's assembly line, and its pivotal role in movie-making history, and its crucial role in advancing LGBTQ civil rights. The Factory building must be listed on the National Register of Historic Places.

Thank you in advance for your consideration of this matter.

Best Regards,
Deborah Jones

Las Vegas, Nevada
debnov1950@aol.com

From: Polanco, Julianne@Parks
To: Mark Bernardin; Burg, William@Parks; westhollywoodheritageproject@gmail.com
Subject: RE: The Factory Nomination, West Hollywood, CA
Date: Tuesday, July 05, 2016 10:55:27 AM

Thank you.

A copy of your email will be placed in the record of the July 29 commission meeting.

Julianne Polanco
State Historic Preservation Officer
California Office of Historic Preservation
1725 23rd St, Ste 100, Sacramento CA 95816-7100
916 445-7000 phone
916 445-7053 fax
julianne.polanco@parks.ca.gov
www.ohp.parks.ca.gov

-----Original Message-----
From: Mark Bernardin [mailto:m.bernardin@me.com]
Sent: Monday, July 04, 2016 8:28 AM
To: Polanco, Julianne@Parks; Burg, William@Parks; westhollywoodheritageproject@gmail.com
Subject: The Factory Nomination, West Hollywood, CA

Dear Commissioners,

I support the nomination of The Factory building in West Hollywood, CA (Mitchell Camera Corp-Studio One/Backlot).
The building is an iconic structure in West Hollywood and the surrounding area. It is a classic Daylight Factory with a history related to the pioneering factory designer and builder Albert and Julius Kahn.

Mitchell Camera Corporation had the building built in 1929 to house their motion picture camera design and manufacture works. While in the building, Mitchell Camera Corp designed and manufactured motion picture cameras that revolutionized filmmaking; giving rise to, at the time, a new film artist called the cinematographer. By 1946, 85% of all movies worldwide were shot on Mitchell cameras. The technology designed at The Factory building was the basis for all motion picture cameras until the introduction of digital in the 1990s.

Scott Forbes opened Studio One disco and the Backlot Theatre in 1974. Prior to Studio One, gay bars were small, windowless, anonymous buildings (in which one entered from the back of the building). The disco filled a vital community need: it celebrated sexual freedom for gay men. Studio One took the gay bar out of the closet, and helped bring gay men out too. Studio One's massive, mainstream influence and success helped bridge the cultural divide between the gay community and the dominant heterosexual society. And in the AIDS crisis, especially the harrowing early years, the disco helped raise desperately needed money and provided a place of community and hope and strength.

The Factory building is an important building and is central to the story/stories of America/Americans. The Factory building is a quintessential American building given its connection to the factory designing/building pioneers that helped create Ford's assembly line, and its pivotal role in movie-making history, and its crucial role in advancing LGBTQ civil rights. The Factory building must be listed on the National Register of Historic Places.

Sincerely,

Mark A. Bernardin
Long Beach, CA

From:	Polanco, Julianne@Parks
To:	Douglas Denoff; Burg, William@Parks; westhollywoodheritageproject@gmail.com
Subject:	RE: The Mitchel Factory Building
Date:	Tuesday, July 05, 2016 10:43:25 AM
Attachments:	image007.png

Thank you.

A copy of your email will be placed in the record of the July 29 commission meeting.

Julianne Polanco
State Historic Preservation Officer
California Office of Historic Preservation
1725 23rd St, Ste 100, Sacramento CA 95816-7100
916 445-7000 phone
916 445-7053 fax
julianne.polanco@parks.ca.gov
www.ohp.parks.ca.gov

From: Douglas Denoff [mailto:doug@suttonent.com]
Sent: Monday, July 04, 2016 1:08 PM
To: Polanco, Julianne@Parks; Burg, William@Parks; westhollywoodheritageproject@gmail.com
Subject: The Mitchel Factory Building

Dear Commissioners,

I support the nomination of The Factory building in West Hollywood, CA (Mitchell Camera Corp-Studio One/Backlot).

I am a 3-time Tony-award-winning Broadway Producer, an Emmy award winner and Grammy-award nominee. My father, Sam Denoff, wrote and produced some of the most iconic television programs of the 1960's and 70's, including The Dick Van Dyke Show, and That Girl…all filmed with Mitchel BNC Cameras manufactured in Southern California. These cameras filmed almost every motion picture and television show from the 1930's on; from "Citizen Kane" to "I Love Lucy", Star Trek, and "Happy Days". I also own one of these iconic cameras in the interest of preserving their history, and I write today to ask that you use your power to do the same with the original Mitchel factory building.

The building is an iconic structure in West Hollywood and the surrounding area. It is a classic Daylight Factory with a history related to the pioneering factory designer and builder Albert and Julius Kahn.

Mitchell Camera Corporation had the building built in 1929 to house their motion picture camera design and manufacture works. While in the building, Mitchell Camera Corp designed and manufactured motion picture cameras that revolutionized filmmaking; giving rise to, at the time, a new film artist called the cinematographer. By 1946, 85% of all movies worldwide were shot on Mitchell cameras. The technology designed at The Factory building was the basis for all motion picture cameras until the introduction of digital in the 1990s.

Scott Forbes opened Studio One disco and the Backlot Theatre in 1974. Prior to Studio One, gay bars were small, windowless, anonymous buildings (in which one entered from the back of the building). Studio One filled a vital community need: it celebrated sexual freedom for gay men. Studio One took the gay bar out of the closet, and helped bring gay men out too. Studio One's massive, mainstream influence and success helped bridge the cultural divide between the gay community and the dominant heterosexual society. And in the AIDS crisis, especially the harrowing early years, Studio One helped raise desperately needed money and provided a place of community and hope and strength.

The Factory building is an important building and is central to the story/stories of America/Americans. The Factory building is a quintessential American building given its connection to the factory designing/building pioneers that helped create Ford's assembly line, and its pivotal role in movie-making history, and its crucial role in advancing LGBTQ civil rights. The Factory building must be listed on the National Register of Historic Places.

Sincerely,

Douglas Denoff

Douglas Denoff
Producer
Sutton Square Entertainment
790 Riverside Drive Suite 10J
New York, NY 10032
1.212.759.9701
www.suttonsquareentertainment.com
doug@suttonent.com

The "electrifying" new revival now on Broadway
fiddlermusical.com

UPCOMING

"Peggy Sue Got Married" is the new musical
from the composer of "Jersey Boys", Bob Gaudio
lyrics by Jerry Leichtling
Book by Arlene Sarner and Jerry Leichtling

“39 Steps” - a New York Times Critic's Pick
Broadway’s longest-running comedy.
Winner of two 2008 Tony Awards
39stepsny.com

Past productions:

Clever Little Lies by Joe DiPietro
Directed by David Saint
Starring Marlo Thomas, Greg Mullavey
Kate Wetherhead and George Merrick
www.cleverlittlelies.com

"Handle With Care" is the hit romantic comedy
by Emmy-nominee Jason Odell Williams
starring Carol Lawrence, Charlotte Cohn,
Sheffield Chastain & Jonathan Sale
directed by Karen Carpenter
A New York Times Critics' Pick now in regional licensing thru DPS
handlewithcaretheplay.com

2013 Tony-winner for Best Play
Vanya and Sonia and Masha and Spike now in regional licensing

"Nice Work if You Can Get It"
The hilarious new George & Ira Gershwin Musical
Starring Matthew Broderick and Kelli O'Hara
TEN Tony nominations including BEST MUSICAL
NINE Drama Desk nominations including BEST MUSICAL
NINE Outer Critics Circle nominations including BEST MUSICAL
Broadway run ended January 15, 2013
Now touring the USA!
niceworkontour.com

Shout! Broadway Records
790 Riverside Drive Suite 10J
New York, NY 10032
1.212.759.9701
www.suttonsquareentertainment.com
doug@suttonent.com

Producers of the Grammy-nominated Original Broadway Cast Album
of "Nice Work If You Can Get It" and the 2012 Revival of "Annie"

"Latin Roots - The Music of Desi Arnaz and his Orchestra"
Starring Lucie Arnaz.

“Just Believe, a really, really, REALLY true story of The Sandman”
-a new musical classic for the whole family

From: Polanco, Julianne@Parks
To: Ron Hamill; Burg, William@Parks; westhollywoodheritageproject@gmail.com
Subject: RE: save the factory building
Date: Tuesday, July 05, 2016 10:42:35 AM

Thank you.

Your email will be placed in the record of the July 29 commission meeting.

Julianne Polanco
State Historic Preservation Officer
California Office of Historic Preservation
1725 23rd St, Ste 100, Sacramento CA 95816-7100
916 445-7000 phone
916 445-7053 fax
julianne.polanco@parks.ca.gov
www.ohp.parks.ca.gov

From: Ron Hamill [mailto:ronhamill818@yahoo.com]
Sent: Monday, July 04, 2016 11:02 AM
To: Polanco, Julianne@Parks; Burg, William@Parks; westhollywoodheritageproject@gmail.com
Subject: Re: save the factory building

Dear Commissioners,

I support the nomination of The Factory building in West Hollywood, CA (Mitchell Camera Corp-Studio One/Backlot).
The building is an iconic structure in West Hollywood and the surrounding area. It is a classic Truscon Steel Company Daylight Factory with a history related to the pioneering factory designer and builder Albert and Julius Kahn. The Mitchell Camera Corporation had the building built in 1929 to house their motion picture camera design and manufacture works. While in the building, Mitchell Camera Corp designed and manufactured motion picture cameras that revolutionized filmmaking.

Scott Forbes opened Studio One disco and the Backlot Theatre in 1974. Before Studio One, most gay bars were small, windowless, anonymous buildings. The disco provided a vital community need: it celebrated a social and sexual freedom for gay men. Because Scott Forbes took over the entire second floor, and part of the first floor, he inherited different types of rooms. The entry area had a large elevator that took patrons to a second floor ante room with a built in fish tank. The front bar area provided spaces for people to talk, the disco, The Saloon bar, in a country motif, with it's pool table and pinball machines and the Backlot which originally had lit facades of buildings around the perimeter of

the room, thus The Backlot. All these spaces provided a virtual shopping mall of different environments that patrons could visit.
The Studio One Backlot was a top line performance venue.

I started working at the Backlot in 1978 doing lighting and sound for performers such as Bernadette Peters, Joan Rivers, Phyllis Diller, Joshua Logan, Julie Budd, Rosalyn Kind, Sally Kellerman, Wayland Flowers and Madame, female impersonator Charles Pierce, impressionist Jim Bailey, Eartha Kitt, Kaye Ballard, Judy Kaye, Gotham, Mary Mcgregor, Rip Taylor, Pudgy, Craig Russell, Stephanie Mills, Helen Schneider, Ruth Olay, Marni Nixon, Maxene Andrews, Marcia Lewis, Morgana King, Karen Morrow and Nancy Dussault, Ren Woods, Donna McKechnie, Linda Hopkins, Lainie Kazan, Maureen McGovern, Tom Dreesen, The Rick and Ruby Show, cabaret version of El Grande De Coca Cola and Side By Side By Sondheim.

I often equate working for Scott Forbes and The Backlot like going to a college. I learned so much from Scott and the performers and their crews. Where else could I learn lighting tricks from top Broadway lighting designers who came in with performers like Bernadette Peters.

Studio One and the Backlot hosted many fundraisers, including one of the nation's first AIDS fundraisers put on by newly formed AIDS Project Los Angeles and hosted by Joan Rivers in 1984, no other celebrities would participate.

The Factory building is an important building for many different reasons and is central to the history of West Hollywood, the entire motion picture industry, LGBT culture and as a building that has had such an impact in many American lives. The Factory building is a quintessential American building given its connection to the factory designing/building pioneers that helped create Ford's assembly line, and its pivotal role in movie-making history, and its crucial role in advancing LGBT civil rights.
The Factory building must be listed on the National Register of Historic Places.

Sincerely,
Ron Hamill
Studio City, CA.

From: Polanco, Julianne@Parks
To: Gary Mortimer; Burg, William@Parks; westhollywoodheritageproject@gmail.com
Subject: RE: The Factory / Studio One building nomination
Date: Tuesday, July 05, 2016 10:42:04 AM

Thank you.

Your email will be included in the record of the July 29 commission meeting.

Julianne Polanco
State Historic Preservation Officer
California Office of Historic Preservation
1725 23rd St, Ste 100, Sacramento CA 95816-7100
916 445-7000 phone
916 445-7053 fax
julianne.polanco@parks.ca.gov
www.ohp.parks.ca.gov

From: Gary Mortimer [mailto:gary91103@sbcglobal.net]
Sent: Monday, July 04, 2016 8:28 AM
To: Polanco, Julianne@Parks; Burg, William@Parks; westhollywoodheritageproject@gmail.com
Subject: The Factory / Studio One building nomination

Dear National Register Commissioners,

I support the nomination of The Factory building in West Hollywood, CA (Mitchell Camera Corp-Studio One/Backlot).

The building is an iconic structure in West Hollywood and the surrounding area. It is a classic Daylight Factory with a history related to the pioneering factory designer and builder Albert and Julius Kahn.

Mitchell Camera Corporation had the building built in 1929 to house their motion picture camera design and manufacture works. While in the building, Mitchell Camera Corp designed and manufactured motion picture cameras that revolutionized filmmaking; giving rise to, at the time, a new film artist called the cinematographer. By 1946, 85% of all movies worldwide were shot on Mitchell cameras. The technology designed at The Factory building was the basis for all motion picture cameras until the introduction of digital in the 1990s.

Scott Forbes opened Studio One disco and the Backlot Theatre in 1974. Prior to Studio One, gay bars were small, windowless, anonymous buildings (in which one entered from the back of the building). The disco filled a vital community need: it celebrated sexual freedom for gay men. Studio One took the gay bar out of the closet, and helped bring gay men out too. Studio One's massive, mainstream influence and success helped bridge the cultural divide

between the gay community and the dominant heterosexual society. And in the AIDS crisis, especially the harrowing early years, the disco helped raise desperately needed money and provided a place of community and hope and strength.

The Factory building is an important building and is central to the story/stories of America/Americans. The Factory building is a quintessential American building given its connection to the factory designing/building pioneers that helped create Ford's assembly line, and its pivotal role in movie-making history, and its crucial role in advancing LGBTQ civil rights. The Factory building must be listed on the National Register of Historic Places.

Sincerely,

Gary Mortimer
Pasadena, CA

From:	Polanco, Julianne@Parks
To:	Gary; Burg, William@Parks; westhollywoodheritageproject@gmail.com
Subject:	RE: Save the Factory/Studio One Building
Date:	Tuesday, July 05, 2016 10:41:42 AM

Thank you. Your email will be placed in the record of the July 29 commission meeting.

Julianne Polanco
State Historic Preservation Officer
California Office of Historic Preservation
1725 23rd St, Ste 100, Sacramento CA 95816-7100
916 445-7000 phone
916 445-7053 fax
julianne.polanco@parks.ca.gov
www.ohp.parks.ca.gov

From: Gary [mailto:crooner39@sbcglobal.net]
Sent: Monday, July 04, 2016 8:16 AM
To: Polanco, Julianne@Parks; Burg, William@Parks; westhollywoodheritageproject@gmail.com
Subject: Save the Factory/Studio One Building

Dear National Register Commissioners,

I support the nomination of The Factory building in West Hollywood, CA (Mitchell Camera Corp-Studio One/Backlot).

The building is an iconic structure in West Hollywood and the surrounding area. It is a classic Daylight Factory with a history related to the pioneering factory designer and builder Albert and Julius Kahn.

Mitchell Camera Corporation had the building built in 1929 to house their motion picture camera design and manufacture works. While in the building, Mitchell Camera Corp designed and manufactured motion picture cameras that revolutionized filmmaking; giving rise to, at the time, a new film artist called the cinematographer. By 1946, 85% of all movies worldwide were shot on Mitchell cameras. The technology designed at The Factory building was the basis for all motion picture cameras until the introduction of digital in the 1990s.

Scott Forbes opened Studio One disco and the Backlot Theatre in 1974. Prior to Studio One, gay bars were small, windowless, anonymous buildings (in which one entered from the back of the building). The disco filled a vital community need: it celebrated sexual freedom for gay men. Studio One took the gay bar out of the closet, and helped bring gay men out too. Studio One's massive, mainstream influence and success helped bridge the cultural divide between the gay community and the dominant heterosexual society. And in the AIDS crisis, especially the harrowing early years, the disco helped raise desperately needed money and provided a place of community and hope and strength.

The Factory building is an important building and is central to the story/stories of America/Americans. The Factory building is a quintessential American building given its connection to the factory designing/building pioneers that helped create Ford's assembly line, and its pivotal role in movie-making history, and its crucial role in advancing LGBTQ civil rights. The Factory building must be listed on the National Register of Historic Places.

Sincerely,
Paul Allen
Los Angeles, CA

From: Polanco, Julianne@Parks
To: Kristeen Hernandez; westhollywoodheritageproject@gmail.com; Burg, William@Parks
Subject: RE: The Factory building in West Hollywood
Date: Tuesday, July 05, 2016 10:38:25 AM

Thank you.

Your email will be placed in the record for the July 29 commission meeting.

Julianne Polanco
State Historic Preservation Officer
California Office of Historic Preservation
1725 23rd St, Ste 100, Sacramento CA 95816-7100
916 445-7000 phone
916 445-7053 fax
julianne.polanco@parks.ca.gov
www.ohp.parks.ca.gov

From: Kristeen Hernandez [mailto:kristeen_hernandez@yahoo.com]
Sent: Sunday, July 03, 2016 2:23 PM
To: westhollywoodheritageproject@gmail.com; Burg, William@Parks; Polanco, Julianne@Parks
Subject: The Factory building in West Hollywood

Dear Commissioners,
I support the nomination of The Factory building in West Hollywood, CA (Mitchell Camera Corp-Studio One/Backlot).

The building is an iconic structure in West Hollywood and the surrounding area. It is a classic Daylight Factory with a history related to the pioneering factory designer and builder Albert and Julius Kahn.

Mitchell Camera Corporation had the building built in 1929 to house their motion picture camera design and manufacture works. While in the building, Mitchell Camera Corp designed and manufactured motion picture cameras that revolutionized filmmaking; giving rise to, at the time, a new film artist called the cinematographer. By 1946, 85% of all movies worldwide were shot on Mitchell cameras. The technology designed at The Factory building was the basis for all motion picture cameras until the introduction of digital in the 1990s.

Scott Forbes opened Studio One disco and the Backlot Theatre in 1974. Prior to Studio One, gay bars were small, windowless, anonymous buildings (in which one entered from the back of the building). The disco filled a vital community need: it celebrated sexual freedom for gay men. Studio One took the gay bar out of the closet, and helped bring gay men out too. Studio One's massive, mainstream influence and success helped bridge the cultural divide between the gay community and the dominant heterosexual society. And in the AIDS crisis, especially the harrowing early years, the disco helped raise desperately needed money and provided a place of community and hope and strength.

The Factory building is an important building and is central to the story/stories of America/Americans. The Factory building is a quintessential American building given

its connection to the factory designing/building pioneers that helped create Ford's assembly line, and its pivotal role in movie-making history, and its crucial role in advancing LGBTQ civil rights. The Factory building must be listed on the National Register of Historic Places.

Sincerely,
Kristeen T. Hernandez
4874 Sunset Ave.
La Crescenta, CA 91214

From:	Polanco, Julianne@Parks
To:	Sondra M.; Burg, William@Parks
Subject:	RE: The Factory nomination WeHo
Date:	Tuesday, July 05, 2016 10:38:00 AM

Thank you. Your email will be placed in the record at the July 29 commission meeting.

Julianne Polanco
State Historic Preservation Officer
California Office of Historic Preservation
1725 23rd St, Ste 100, Sacramento CA 95816-7100
916 445-7000 phone
916 445-7053 fax
julianne.polanco@parks.ca.gov
www.ohp.parks.ca.gov

From: Sondra M. [mailto:mssondra2006@gmail.com]
Sent: Sunday, July 03, 2016 9:38 AM
To: Polanco, Julianne@Parks; Burg, William@Parks
Subject: The Factory nomination WeHo

Dear Commissioners,

I support the nomination of The Factory building in West Hollywood, CA (Mitchell Camera Corp-Studio One/Backlot).
The building is an iconic structure in West Hollywood and the surrounding area. It is a classic Daylight Factory with a history related to the pioneering factory designer and builder Albert and Julius Kahn.

Mitchell Camera Corporation had the building built in 1929 to
house their motion picture camera design and manufacture works. While in the building, Mitchell Camera Corp designed and manufactured motion picture cameras that revolutionized filmmaking; giving rise to, at the time, a new film artist called the cinematographer. By 1946, 85% of all movies worldwide were shot on Mitchell cameras. The technology designed at The Factory building was the basis for all motion picture cameras until the introduction of digital in the 1990s.

Scott Forbes opened Studio One disco and the Backlot Theatre in 1974. Prior to Studio One, gay bars were small, windowless, anonymous buildings (in which one entered from the back of the building). The disco filled a vital community need: it celebrated sexual freedom for gay men. Studio One took the gay bar out of the closet, and helped bring gay men out too. Studio One's massive, mainstream influence and success helped bridge the cultural divide between the gay community and the dominant heterosexual society. And in the AIDS crisis, especially the harrowing early years, the disco helped raise desperately needed money and provided a place of community and hope and strength.

The Factory building is an important building and is central to the story/stories of America/Americans. The Factory building is a quintessential American building given its

connection to the factory designing/building pioneers that helped create Ford's assembly line, and its pivotal role in movie-making history, and its crucial role in advancing LGBTQ civil rights. The Factory building must be listed on the National Register of Historic Places.

Sincerely,

Sondra Martin
Hollywood, CA

From: Polanco, Julianne@Parks
To: Laura Boccaletti; Burg, William@Parks; westhollywoodheritageproject@gmail.com
Subject: RE: The Factory nomination, West Hollywood, CA
Date: Tuesday, July 05, 2016 10:37:35 AM

Thank you. Your correspondence will be placed in the record for this item at the July 29 commission meeting.

Julianne Polanco
State Historic Preservation Officer
California Office of Historic Preservation
1725 23rd St, Ste 100, Sacramento CA 95816-7100
916 445-7000 phone
916 445-7053 fax
julianne.polanco@parks.ca.gov
www.ohp.parks.ca.gov

From: Laura Boccaletti [mailto:lboccaletti@yahoo.com]
Sent: Sunday, July 03, 2016 8:09 AM
To: Polanco, Julianne@Parks; Burg, William@Parks; westhollywoodheritageproject@gmail.com
Subject: The Factory nomination, West Hollywood, CA

Dear Commissioners,

I support the nomination of The Factory building in West Hollywood, CA (Mitchell Camera Corp-Studio One/Backlot).
The building is an iconic structure in West Hollywood and the surrounding area. It is a classic Daylight Factory with a history related to the pioneering factory designers and builders Albert and Julius Kahn.

Mitchell Camera Corporation had the building built in 1929 to house their motion picture camera design and manufacture works. While in the building, Mitchell Camera Corp designed and manufactured motion picture cameras that revolutionized filmmaking; giving rise to, at the time, a new film artist called the cinematographer. By 1946, 85% of all movies worldwide were shot on Mitchell cameras. The technology designed at The Factory building was the basis for all motion picture cameras until the introduction of digital in the 1990s.

Scott Forbes opened Studio One disco and the Backlot Theatre in 1974. Prior to Studio One, gay bars were small, windowless, anonymous buildings (in which one entered from the back of the building). The disco filled a vital community need: it celebrated sexual freedom for gay men. Studio One took the gay bar out of the closet, and helped bring gay men out, too. Studio One's massive, mainstream influence and success helped bridge the cultural divide between the gay community and the dominant heterosexual society. And in the AIDS crisis, especially the harrowing early years, the disco helped raise desperately needed money and provided a place of community and hope and strength.

The Factory building is an important building and is central to the story/stories of America/Americans. The Factory building is a quintessential American building, given its connection to the factory designing/building pioneers that helped create Ford's assembly line, its pivotal role in movie-making history, and, finally its crucial role in advancing LGBTQ civil rights. The Factory building must be listed on the National Register of Historic Places.

Sincerely,

Laura Boccaletti

West Hollywood, CA

From: Tony Randall
To: Burg, William@Parks
Subject: The Factory Nomination
Date: Sunday, July 03, 2016 11:28:24 PM

RE: The Factory nomination,West Hollywood, CA
Dear National Register Commissioners,
I support the nomination of The Factory building in West Hollywood, CA (Mitchell Camera Corp-Studio One/Backlot).
The building is an iconic structure in West Hollywood and the surrounding area. It is a classic Daylight Factory with a history related to the pioneering factory designer and builder Albert and Julius Kahn.
Mitchell Camera Corporation had the building built in 1929 to house their motion picture camera design and manufacture works. While in the building, Mitchell Camera Corp designed and manufactured motion picture cameras that revolutionized filmmaking; giving rise to, at the time, a new film artist called the cinematographer. By 1946, 85% of all movies worldwide were shot on Mitchell cameras. The technology designed at The Factory building was the basis for all motion picture cameras until the introduction of digital in the 1990s.
Scott Forbes opened Studio One disco and the Backlot Theatre in 1974. Prior to Studio One, gay bars were small, windowless, anonymous buildings (in which one entered from the back of the building). The disco filled a vital community need: it celebrated sexual freedom for gay men. Studio One took the gay bar out of the closet, and helped bring gay men out too. Studio One's massive, mainstream influence and success helped bridge the cultural divide between the gay community and the dominant heterosexual society. And in the AIDS crisis, especially the harrowing early years, the disco helped raise desperately needed money and provided a place of community and hope and strength.
The Factory building is an important building and is central to the story/stories of America/Americans. The Factory building is a quintessential American building given its connection to the factory designing/building pioneers that helped create Ford's assembly line, and its pivotal role in movie-making history, and its crucial role in advancing LGBTQ civil rights. The Factory building must be listed on the National Register of Historic Places.
Sincerely,
Name Anthony Randall
Honolulu, Hi.,

UNITED STATES DEPARTMENT OF THE INTERIOR
NATIONAL PARK SERVICE

NATIONAL REGISTER OF HISTORIC PLACES
EVALUATION/RETURN SHEET

Requested Action: Nomination with Owner Objection

Property Name: Mitchell Camera Corporation--Studio One

Multiple Name:

State & County: CALIFORNIA, Los Angeles

Date Received:	Date of Pending List:	Date of 16th Day:	Date of 45th Day:	Date of Weekly List:
12/23/2016			2/7/2017	

Reference number: SG100000627

Nominator: State

Reason For Review:

Submission Type	*Property Type*	*Problem Type*
__ Appeal	__ PDIL	__ Text/Data Issue
__ SHPO Request	__ Landscape	__ Photo
__ Waiver	__ National	__ Map/Boundary
__ Resubmission	__ Mobile Resource	__ Period
__ Other		__ Less than 50 years

__X__ Eligible _____ Return _____ Ineligible __2/7/2017__ Date

Abstract/Summary Comments: The National Park Service concurs with the California SHPO and the State Historical Resources Commission that the Mitchell Camera Corporation Factory-Studio One is eligible for listing in the National Register of Historic Places at the local level under Criterion A in the areas of Industry, Commerce, Social History, and Entertainment/Recreation. [Owner Objection]

Recommendation/ Criteria: Accept NR Criterion A

Reviewer Paul Lusignan Discipline Historian

Telephone (202)354-2229 Date 1/7/2017

DOCUMENTATION: see attached comments Y see attached SLR Y

If a nomination is returned to the nomination authority, the nomination is no longer under consideration by the National Park Service.